آذرصنعت

وارد کننده و توزیع کننده مستقیم ابزار آلات صنعتی

AUTOGRIP®

Great Rigidity, Infallible Precision

POWER CHUCKS
ROTARY CYLINDERS
CLAMPING SERIES

info@azarsanat.com www.azarsanat.net ۰۲۱۶۶۷۲۴۴۲۵

AUTOGRIP MACHINERY COMPANY

Autogrip machinery was established in 1989 in Taiwan. Our product lines focus on the power chucks, rotary cylinders and automatic clamping series.

We provide the optimized solutions and services for our customers worldwide.

AUTOGRIP'S BUSINESS PHILOSOPHY

With integrity and commitment, we provide the most professional products and services for the customers.

AUTOGRIP®

Great Rigidity, Infallible Precision

LOCATION OF AUTOGRIP

Our factory locates in the middle part of Taiwan, the campus occupies 10,000 square meters.

Autogrip makes world-class high-quality products and services with high customer satisfaction.

WE ARE FROM TAIWAN

All the products of Autogrip are designed and made in our hometown-Taiwan. You can find that our products have a strong Taiwan spirit-solid and durable, with high rigidity and high precision.

Our company has a good reputation in the industry. Autogrip is devoted to providing the optimized solutions and service for the workpiece clamping needs.

AUTOGRIP MECHANICAL TESTING LAB.

ilac-MRA

TAF
Testing Laboratory
3353

Autogrip mechanical testing lab. continues to develop reliable test equipments and technique for controlling the product quality.
Before the new product is launched to the market, the products will go through a series of tests to ensure that the performance and accuracy meet the design specifications.

Products in the manufacturing process are also tested regularly to ensure the products are of good quality and consistent.
The Lab controls the quality for the customers and provides customers with the most satisfied experience when using the products.

DYNAMIC GRIPPING FORCE TEST

- The curve of gripping force against rotary speed is obtained via force sensor at a given test condition.

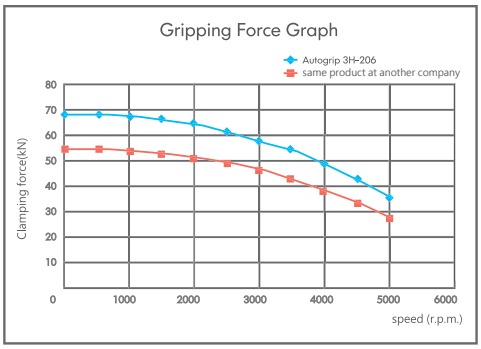

DYNAMIC OIL LEAKING TEST

- The oil leaking of cylinder is measured at different rotary speed to ensure it is within engineering specification.

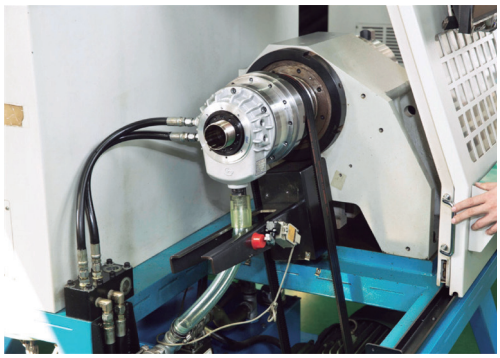

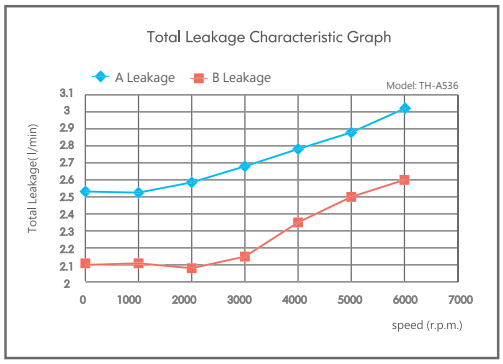

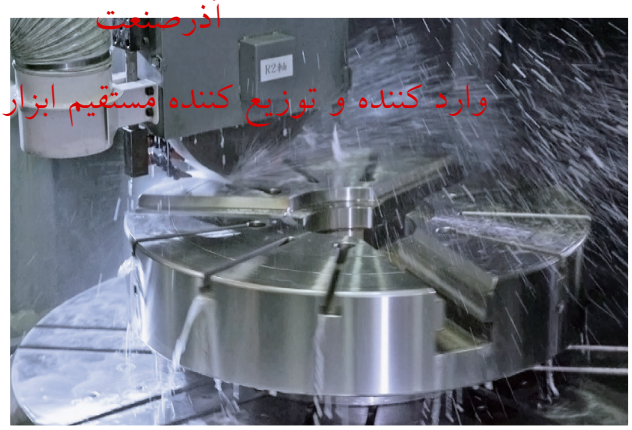

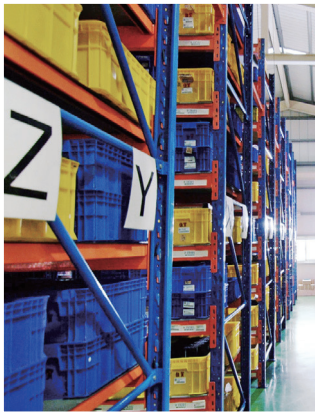

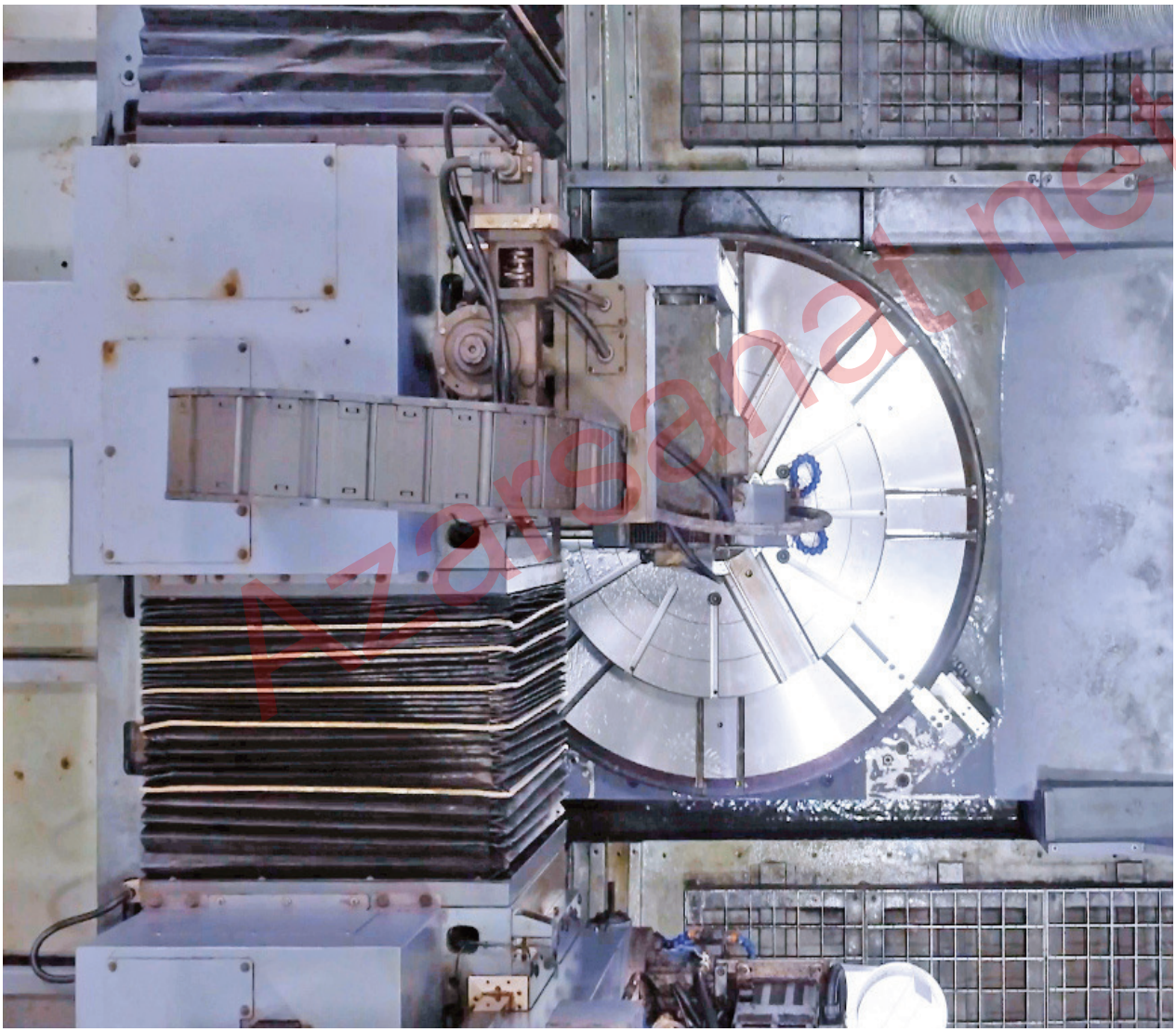

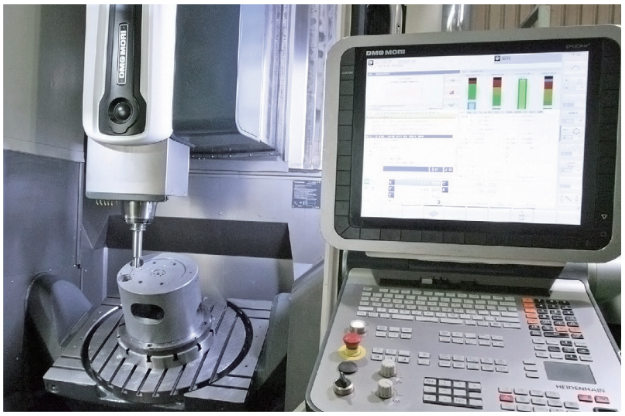

Why AUTOGRIP?

1. CUSTOM DESIGN SERVICE

Example: Workpiece seating confirmation for automation workholding, cylinder stroke modify, additional machining in body, special clamping requirement, Inch serration, special soft jaw demand.

2. VARIETY OF CHUCKS & CYLINDERS

Chuck: 1-jaw to 6-jaw chuck from 3" to 79", Extra long stroke, Pull back, Stationary chucks, Collet chucks and other clamping solution.

Cylinder: through-hole, Non-through hole, Stroke control, Coolant/air connection, Air cylinder, Double rod, Compact style.

3. FASTER DELIVERY AND SATISFIED SERVICE.

SPECIAL PURPOSE POWER CHUCK

AUTOGRIP

QUICK JAW CHANGE CHUCK

3Q

QUICK JAW-CHANGE CHUCK

QUICK JAW-CHANGE POWER CHUCKS SAVE YOUR TIME AND MAKE WORK FLOW EASIER AND EFFICIENTLY

FEATURES

- The shortest changes time for soft jaw, it is the high repeatability precision.
- Chuck of all parts hardened, ground and lubricated directly.
- Construction of high rigidity and high clamping accuracy.
- For safety system that master jaw will complete return when base jaw and serration match up properly.

EASY TO CHANGE JAW IN 2 STEPS

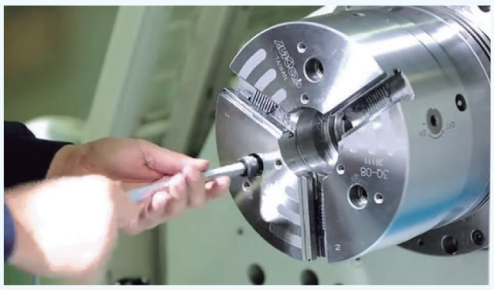

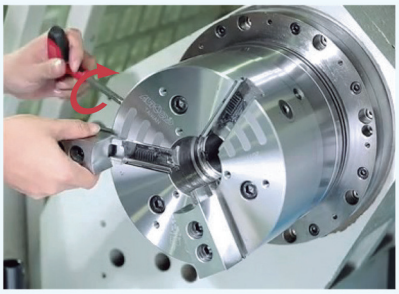

1. Turn T-handle counter clockwise to release and move jaw forward to its position.

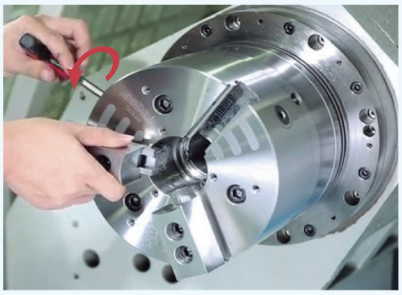

2. Turn T-handle clockwise to tighten and the jaw is locked.

AUTOGRIP

SPECIAL PURPOSE POWER CHUCK

SWING TYPE 3-JAW POWER CHUCK

TAIWAN
EXCELLENCE 2020

3W

SWING TYPE 3-JAW POWER CHUCK

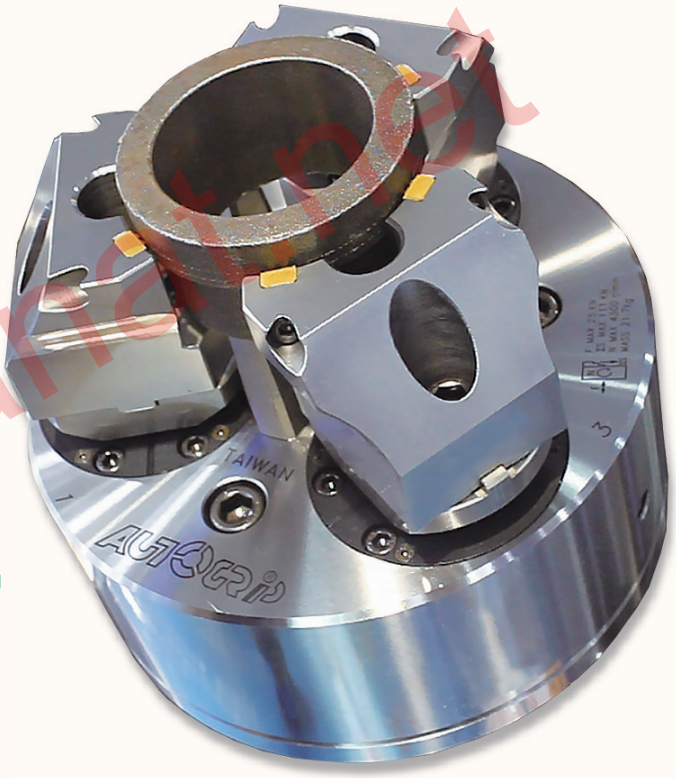

FEATURES

- Grip the work piece in radial direction and then pull down.
- Gripping on forging or casting part with taper up to 20°.
- Jaw equalizing: 5° Max.
- Anti-dust and Seal proof for cutting fluid,easy to maintain.

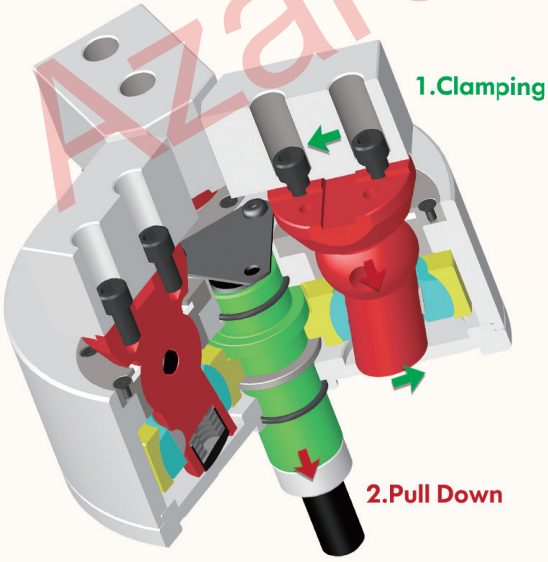

info@azarsanat.com
www.azarsanat.net
۰۲۱۶۶۷۲۴۴۲۵

SPECIAL PURPOSE POWER CHUCK

LARGE THRU-HOLE AIR CHUCK

AUTOGRIP

TAIWAN
EXCELLENCE 2018

AP SERIES

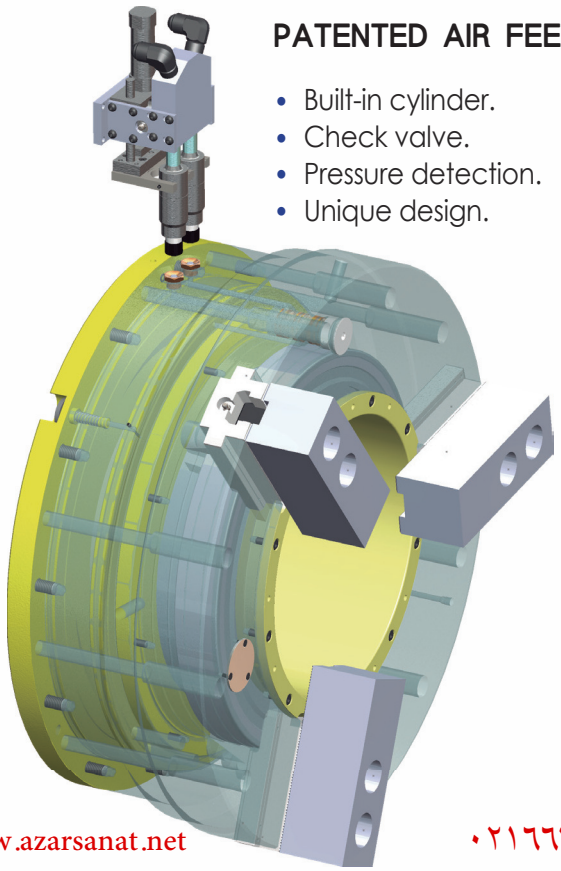

PATENTED AIR FEED SYSTEM

- Built-in cylinder.
- Check valve.
- Pressure detection.
- Unique design.

FEATURES :

- Large thru-hole : Ø52mm~Ø375mm.
- No distributor ring needed.
- Easy to install.
- Less maintenance.

Product Patented

U.S.A	US8770222 B2
Taiwan	M440159
	M415011
Germany	20.2011.101.818.4
	20.2012.102.498.5
Japan	3169457 / 3178706
EU	EP 2517822 B1
China	ZL 2011 2 0141324.9
	ZL 2012 2 0274549.6
Italy	0000278076

AUTOGRIP

POWER CHUCK

POWER CHUCK FOR VERTICAL LATHE

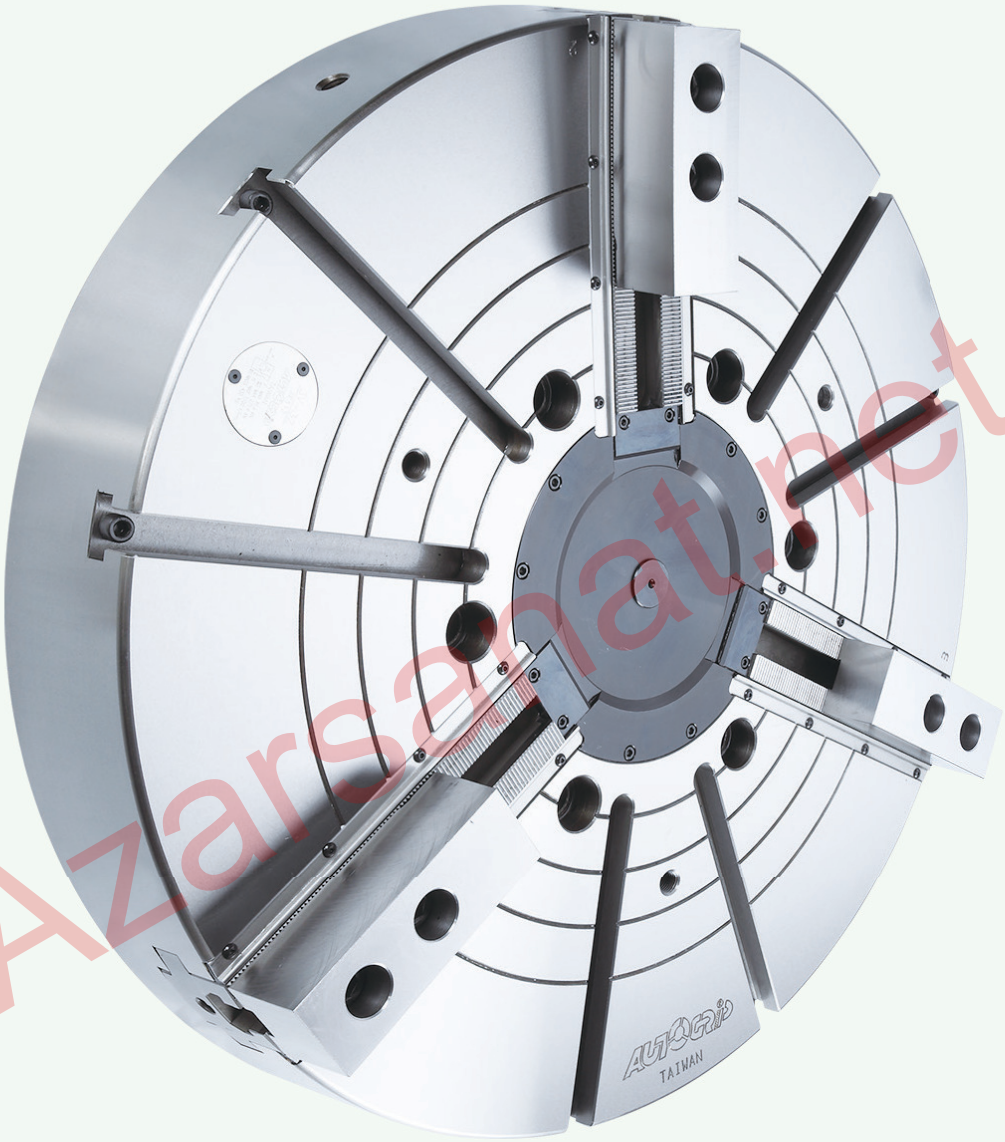

3V series

The maximum diameter is

2000mm(79")

- It's a WEDGE-HOOK type 3-jaw high speed power chuck.
- With manual radial setting of master jaws for the workpieces centering.
- Sealed against swarf, chips and coolant, suitable for vertical lathe.

- Various Models / Size:
  Available in 3 , 4 and 6-jaw versions .
- with sizes 12 to 79 inch diameter.
- Rotary cylinder: RE series .

STATIONARY CHUCK

AUTOGRIP

STATIONARY CHUCK BASE PLATE

MP4 MULTI-PLATE.4-PLATE

FEATURES

- For milling machine / machine center.
- Allow simultaneous machining with up to 4 grippers. (Order can be customized for 2,3,6 grippers).
- Work with SP/SD/SU/SE vertical chuck.
- Driven by Hydraulic or Pneumatic.
- Individual circuit for each chuck.
- Special design and reduce the height of working surface.
- Lock valve unit (option).
- Air tight detection function(option).

STATIONARY CHUCK SERIES

SP-STATIONARY CHUCK
- Wedge-hook type.

SD-STATIONARY PULL BACK CHUCK
- Pull back / Heavy duty machining/ Air tight detection.

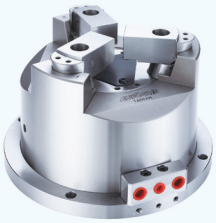

SU-STATIONARY PULL LOCK CHUCK
- Pull lock / Heavy duty machining / Air tight detection.

SE-STATIONARY PULL BACK CHUCK FOR INTERNAL GRIPPING
- Pull back / inner dia. clamping / Air tight detection.

RUBBER GRIP COLLET

Lathe

CBD

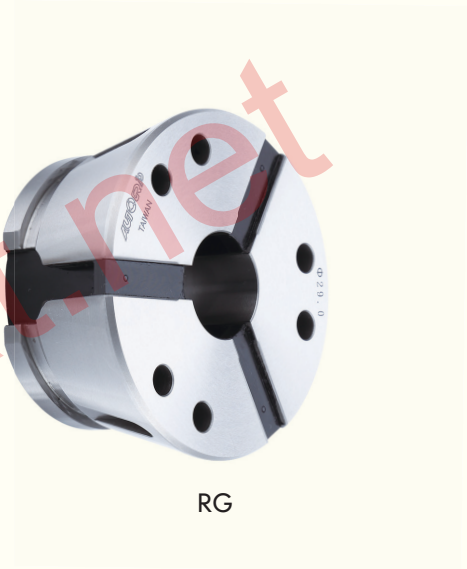

RG

High gripping force / High accuracy / Quick jaw change

Milling machine

SCB

RG

Grip Range: ±0.5mm. Accuracy: With customized rubber grip collet, the accuracy can reach ±10μm.

IS

POWER INDEXING CHUCK

FEATURES

- Indexing operates during the spindle rotation, can perform a quick change between multiple working axles.
- All parts of chuck hardened, ground and lubricated directly.
- Sealed against swarf, chips and coolant.
- High rigidity and high repeatability precision.
- Unique indexing system and hydraulic system, with pressure detection device in chuck, high reliability.

ACCESSORY

AUTOGRIP

GRIPPING FORCE SENSOR

GFS-100

GRIPPING FORCE SENSOR

Can be configured for
2 or 3-Jaw operation

FEATURES

- Measuring chuck clamping force dynamically.
- Wireless signal transmission.
- Data collected via the mobile device APP.

Model	Max. Load (1-Jaw)	Max. Speed	Gripping range	Accuracy
GFS-100	100 kN	6000 r.p.m.	76,90,110 mm	± 2%

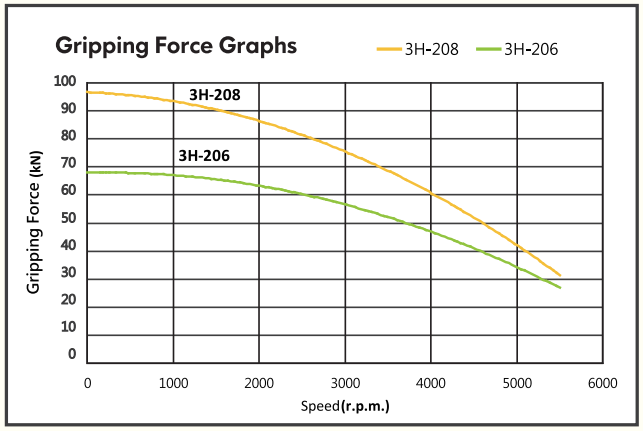

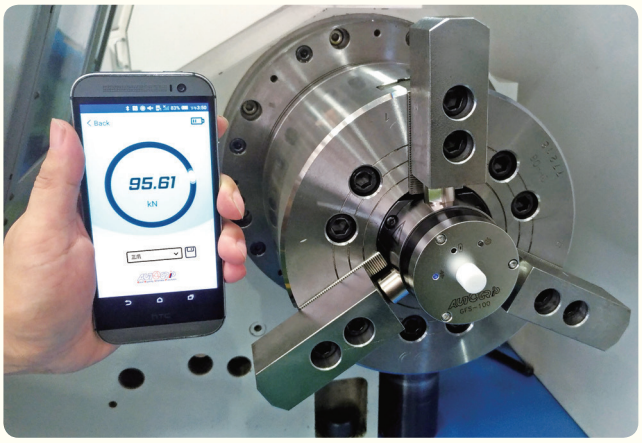

info@azarsanat.com
www.azarsanat.net
۰۲۱۶۶۷۲۴۴۲۵

آذرصنعت

وارد کننده و توزیع کننده مستقیم ابزار آلات صنعتی

AUTOGRIP®
Great Rigidity, Infallible Precision

Chuck and Cylinder chooses propose list

- **Shaft-type workpiece Pipe-type workpiece (Insertion of workpiece axis into chuck required)**
  - **A** Gripping round figure
  - **B** Gripping taper Irregular workpiece
  - **C** Large-sized shaft Pipe-type
- **Plate-type workpiece Flange-type workpiece**
  - **D** Gripping round figure
  - **E** Gripping taper Irregular workpiece

F Exceed specifications diameter workpiece

G Gripping exceed big diameter

H Automatic Feeder

I Rough working procedure

J Exact working procedure

K High precision request

L Easy deform workpiece

M Seating confirmation required

N Heavy duty machining

O Vertical spindle

P Drill, Milling, Special purpose machine, Cutting center machine jig

Q Gripping on 4 sides and centering

R Stroke detector

S Seating air sensor confirmation

T Center air and water flooding

U End sides gripping

V Build in air cylinder

W Workpiece item and jig adjust with high frequency

X Single sides standard(fixed jaw)

Y Center standard workpiece

Chuck choose	A	B	C	D	E	F	G	H	I	J	K	L	M	N	O	P	Q	R	S	T	U	V	W	X	Y	Cylinder choose
3H	●								●																	TK,TS,TH,TR
3H	●								●									●								TK,TS,TH,TR,CT
3H-2,3H-B	●		●			●			●									●								TK,TS,TH,TR,CT
2H		●																●								TK,TS,TH,TR,CT
4H		●							●									●								TK,TS,TH,TR,CT
3P				●					●																	RK
3P				●					●									●								RS
3P				●					●											●						RL,RL-A
3P				●					●									●		●						RE-A,RE-L
2P					●													●								RS
3L	●						●											●								TK,TS,TH,CT
2L		●					●											●								TK,TS,TH,CT
1L					●																			●		RK
3M				●			●											●		●						RE-A,RE-L
2M					●		●											●		●						RE-A,RE-L
3V				●					●						●			●		●						RE-A,RE-L
4V		●			●				●						●			●		●						RE-A,RE-L
RAP	●			●												●						●				-
3E,3D	●								●	●			●						●							RK
2D		●							●	●			●						●							RK
3U	●								●	●	●		●	●												RK
3N				●						●			●						●							RK
3J				●	●							●	●					●	●	●	●				●	RK
2J				●		●						●	●					●	●	●	●				●	RK
3R				●					●	●		●													●	RK
3W				●	●	●			●					●											●	RK
3Q	●																	●					●			TK,TS,TH,CT
4T		●			●												●									RD
AP	●		●			●			●									●				●				-
APS	●		●			●	●		●									●				●				-
IS					●				●																	-
CL	●	●						●		●																TK,TS,TH
CB	●	●						●		●	●	●														TK,TS,TH
CBE	●	●						●		●	●	●														TK,TS,TH
CBD	●	●						●		●	●	●														TK,TS,TH
VH,VP,CP																●										-
SD	●								●	●			●			●			●							-
SU	●								●	●	●		●	●		●			●							-
SP				●					●	●						●										-
SE				●					●	●			●			●			●							-

INDEX [Product Description]

POWER CHUCKS

SPECIAL PURPOSE POWER CHUCKS

MANUAL CHUCKS

3MF
SELF-CENTERING 3-JAW MANUAL CHUCK
Non-Thru-Hole / 3-JAW
39

COLLET CHUCKS

CL
COLLET CHUCK
THRU-HOLE
40

CL-A
COLLET CHUCK
THRU-HOLE
41

CB/CB-A
DRAW COLLET CHUCK
THRU-HOLE
42

CBE/CBE-A
END STOP COLLET CHUCK
THRU-HOLE
43

CBD/CBD-A
DL-DEAD LENGTH COLLET CHUCK
THRU-HOLE
44

SCB
STATIONARY DRAW COLLET CHUCK
STATIONARY
45

RG
RUBBER GRIP COLLET
46

STEEL COLLET
STEEL COLLET
47

STATIONARY CHUCKS

VH
STATIONARY CHUCK WITH THRU-HOLE
THRU-HOLE STATIONARY
2/3-JAW
48

VP
STATIONARY CHUCK
NON-THRU-HOLE STATIONARY
2/3-JAW
49

SP
STATIONARY CHUCK
NON-THRU-HOLE
3-JAW
50

SD
STATIONARY PULL BACK CHUCK
NON-THRU-HOLE
3-JAW
51

SU
STATIONARY PULL LOCK CHUCK
NON-THRU-HOLE
3-JAW
52

SE
STATIONARY PULL BACK CHUCK FOR INTERNAL GRIPPING
NON-THRU-HOLE
3-JAW
53

MP4
STATIONARY CHUCK BASE PLATE
54

SYNCHRONOUS CLAMPS

CP
SYNCHRONOUS CLAMP
CRANK TYPE
55

INDEX [Product Description]

FACING HEADS

ROTARY CYLINDERS

ROTARY VALVE/ROTARY JOINT

PARTS AND ACCESSORIES

RECEIVE OUR LATEST NEWS

AUTOGRIP OUR APP AND DISCOVER MORE...

Download the APP for free!! Available for android, iphone, ipad.

GET IT ON Google Play

Download on the App Store

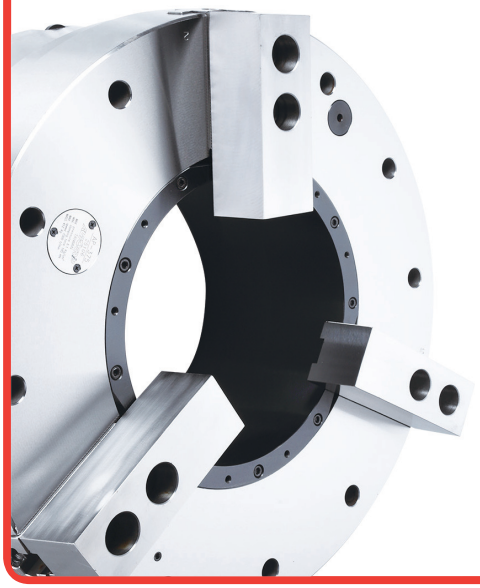

Web

Wechat

AUTOGRIP YouTube IN ENGLISH

You can download the outline drawing (in pdf or dwg format) and 3D step here.

www.autogrip.com.tw

3H-2/3H-2A

LARGE THRU-HOLE POWER CHUCK

3-JAW / Thru-Hole

- WEDGE-HOOK type 3-jaw with the extra large through-hole.
- Matching surfaces of all parts hardened, ground and lubricated directly.
- High rigidity and high clamping accuracy.

■ J is the hole diameter of blank draw nut.
If not notified, Autogrip will adopt the K Default as K value.
K is the maximum thread specification, and it could be customize.

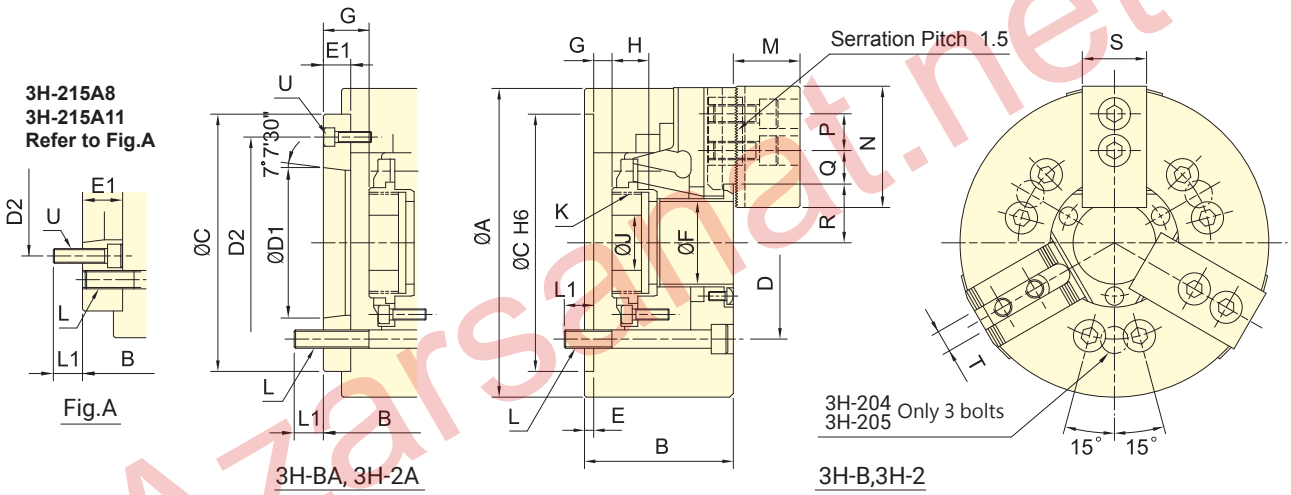

Subject to technical changes

SPECIFICATIONS

MODEL		Plunger stroke	Jaw stroke (Dia.)	Chucking Dia.		Max. D.B. pull	Max. Clamping force	Max. speed	I Moment of inertia	Weight		Matching cyl.	Max. pressure
				Max.	Min.								
		mm	mm	mm	mm	kN (kgf)	kN (kgf)	min^{-1} (r.p.m.)	$kg·m^2$	kg			MPa (kgf/cm^2)
3H-204	A4	13	5.5	113	7	13.7(1400)	29.6(3020)	8000	0.012	4.22	5.34	TK-A528	2.0(20)
3H-205	A4	13	5.5	138	10	17.2(1750)	48(4890)	7000	0.02	6.3	7.1	TK-A533	2.5(25)
3H-206	A5	14	6	170	13	23.3(2375)	66.8(6810)	6000	0.06	13.1	14.9	TK-A646	2.5(25)
3H-208	A6	18	7.6	210	17	31.9(3250)	107(10900)	5000	0.15	21.8	23.4	TK-A853	2.6(26)
3H-210	A8	21	8.9	260	37	49.1(5010)	152(15500)	4500	0.32	37.5	43	TK-A1075	3.2(32)
3H-212	A11	25	10.6	315	43	58.8(6000)	157(16010)	3700	0.74	58.6	64.7	TK-A1512	1.9(19)
3H-215	A8	25	10.6	405	49	71(7240)	180(18350)	2500	2.8	127	149	TK-2114	2.1(21)
3H-215	A11	25	10.6	405	49	71(7240)	180(18350)	2500	2.8	127	143.3	TK-2114	2.1(21)
3H-215	A15	25	10.6	405	49	71(7240)	180(18350)	2500	2.8	127	135.6	TK-2114	2.1(21)
3H-18B	A15	23	10.6	456	79	71(7240)	180(18350)	2000	4.8	162.4	173.4	TK-2416	1.9(19)
3H-221	A15	28	12.9	530	105	90(9175)	234(23860)	1800	7.5	223	234	TK-2416	2.4(24)
3H-224	A20	28	12.9	610	135	100(10200)	240(24500)	1500	15.8	270	284	TK-2820	2.1(21)
3H-232	A20	34	18	800	205	100(10200)	240(24500)	1200	47	546	560	TK-2820	2.1(21)

1. The dimensions and the specifications of 3H-2A、3H-BA type are in red data.

DIMENSIONS

Model		A	B		C	D	D1	D2	E	E1	F	G max.		G min.		H	J
3H-204	A4	113	59	83	85	70.6	63.51	82.6	4	28	32	3.5	31.5	-9.5	18.5	17.5	12
3H-205	A4	138	60	71	110	82.6	63.51	96	4	15	39	1	16	-12	3	20	12
3H-206	A5	170	81	91	140	104.8	82.56	116	5	15	53	13	28	-1	14	17.5	20
3H-208	A6	210	91	103	170	133.4	106.38	150	5	17	66	16.5	33.5	-1.5	15.5	20	30
3H-210	A8	260	102	115	220	171.45	139.72	190	5	18	86	10.5	28.5	-10.5	7.5	25	45
3H-212	A11	315	110	126	300	235	196.87	260	6	22	106	10	32	-15	7	28	50
3H-215	A8	405	132	159	380	330.2	139.72	171.4	6	33	145	11	44	-14	19	39	60
3H-215	A11	405	132	166	380	330.2	196.87	235	6	40	145	11	51	-14	26	39	60
3H-215	A15	405	132	153	380	330.2	285.78	330.2	6	27	145	11	38	-14	13	39	60
3H-18B	A15	456	145	166	380	330.2	285.78	330.2	6	27	165	18	45	-5	22	40	60
3H-221	A15	530	140	161	380	330.2	285.78	330.2	6	27	180	15	42	-13	14	40	80
3H-224	A20	610	145	166	520	463.6	412.78	463.6	6	27	210	15	42	-13	14	41	120
3H-232	A20	800	150	170	520	463.6	412.78	463.6	6	27	275	24	51	-10	17	42	100

Model		K Default		K max.		L	L1		M	N	P	Q max.	Q min.	R max.	R min.	S	T	U
3H-204	A4	M32x1.5		M38x1.5		3~M10	16.0	15	24	52	14	12.75	6.75	25	22.25	23	10	3~M10
3H-205	A4	M40x1.5		M45x1.5		3~M10	14.5	15	31	62	14	20.25	6.75	29.5	26.8	25	10	3~M6
3H-206	A5	M55x2		M60x2		6~M10	16.0	11	37	73	20	21.25	9.25	36	33	31	12	3~M6
3H-208	A6	M60x2		M75x2		6~M12	17.0	15	38	95	25	23.7	10.2	45.7	41.9	35	14	3~M6
3H-210	A8	M85x2		M95x2		6~M16	20.0	22	43	110	30	32.2	12.7	56.5	52.05	40	16	3~M8
3H-212	A11	M115x2		M115x2		6~M20	30.0	28	51	130	30	44.75	14.75	67.8	62.5	50	21	3~M10
3H-215	A8	M155x3	M100x2	M155x3	M115x2	6~M24	36.0	24	63	165	43	49.75	19.75	90	84.7	62	25.5	6~M16
3H-215	A11	M155x3		M155x3		6~M24	36.0	31	63	165	43	49.75	19.75	90	84.7	62	25.5	6~M20
3H-215	A15	M155x3		M155x3		6~M24	36.0	34	63	165	43	49.75	19.75	90	84.7	62	25.5	3~M12
3H-18B	A15	M175x3		M175x3		6~M24	38.0	36	63	165	43	64	20.5	102	96.7	62	25.5	3~M12
3H-221	A15	M190x3		M190x3		6~M24	33.0	36	73	180	60	69.5	24.5	113.5	107.1	65	25	3~M12
3H-224	A20	M225x3		M225x3		6~M24	35.0	33	73	180	60	93.5	24.5	128	121.5	65	25	3~M12
3H-232	A20	M295x3		M295x3		6~M24	36.0	34	73	180	60	150.5	24.5	166	157	65	25	3~M12

The 3H-2 series are power chucks with extra large thru-hole design.
The rotary cylinders are recommended based on power chucks that from 4"~10" are common used in the industry.
If you find that you need different bore size or installation interface, please just contact us. We have many standard and customized rotary cylinders for option and meet your needs.
Please contact AUTOGRIP for more detailed information. Thanks.

1. The dimensions and the specifications of 3H-2A、3H-BA type are in red data.

3H/3H-A THRU-HOLE POWER CHUCK

- WEDGE-HOOK type 3-jaw with the large through-hole.
- Matching surfaces of all parts hardened, ground and lubricated directly.
- High rigidity and high clamping accuracy.

■ J is the hole diameter of blank draw nut.
If not notified, Autogrip will adopt the K Default as K value.
K is the maximum thread specification and it could be customize.

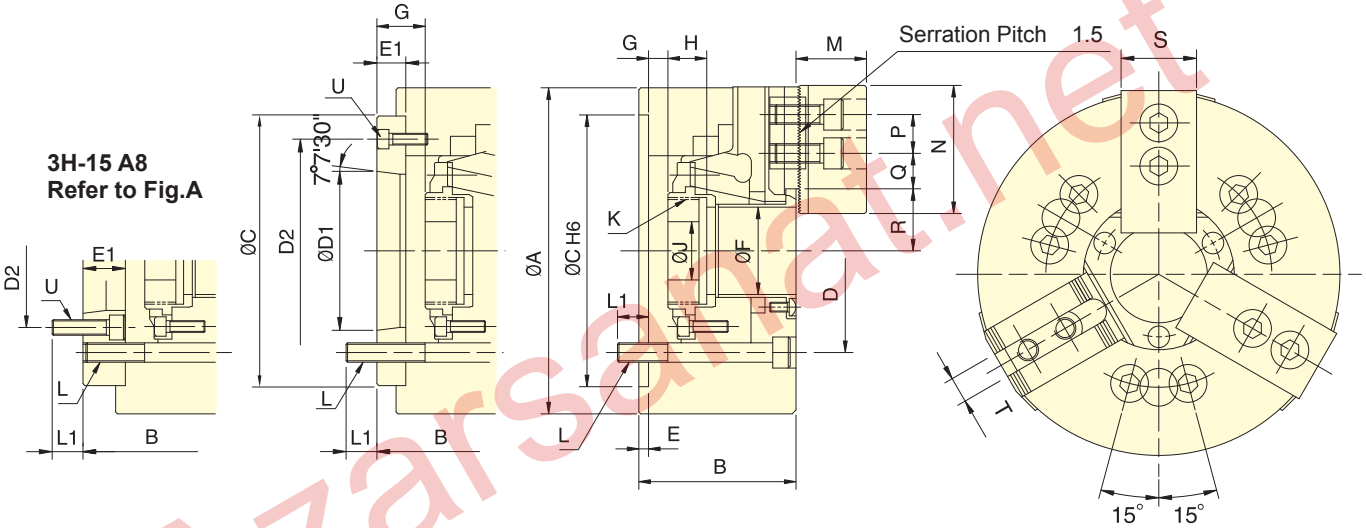

Fig.A 3H-A 3H

Subject to technical changes

SPECIFICATIONS

Model		Plunger stroke	Jaw stroke (Dia.)	Chucking Dia. Max.	Chucking Dia. Min.	Max. D.B. pull	Max. Clamping force	Max. speed	I Moment of inertia	Weight		Matching cyl.	Max. pressure
		mm	mm	mm	mm	kN (kgf)	kN (kgf)	min^{-1} (r.p.m.)	$kg{\cdot}m^2$	kg			MPa (kgf/cm^2)
3H-12	A8	25	10.6	304	34	54.9(5600)	143.7(14650)	3300	0.77	56.6	59.3	TK-A1291	2.5(25)
3H-15	A8	25	10.6	381	20	71(7250)	179.8(18350)	2500	2.28	120	134	TK-A1512	2.3(23)
3H-15	A11	25	10.6	381	20	71(7250)	179.8(18350)	2500	2.39	120	127	TK-A1512	2.3(23)
3H-18	A11	23	10.6	450	50	71(7250)	179.8(18350)	2000	4.78	164	178	TK-A1512	2.3(23)

DIMENSIONS

Model		A	B		C	D	D1	D2	E	E1	F	G max.		G min.		H	J
3H-12	A8	304	110	122	220	171.4	139.72	190	6	18	91	10	28	-15	3	28	50
3H-15	A8	381	132	159	300	235	139.72	171.4	6	33	120	11	44	-14	19	39	60
3H-15	A11	381	132	148	300	235	196.87	260	6	22	120	11	33	-14	8	39	60
3H-18	A11	450	133	149	300	235	196.87	260	6	22	120	11	33	-12	10	39	60

Model		K Default		K max.		L	L1		M	N	P	Q max.	Q min.	R max.	R min.	S	T	U
3H-12	A8	M100x2		M100x2		6~M16	23	25	51.3	130	30	46.25	11.75	61.3	56	50	21	3~M8
3H-15	A8	M130x2	M100x2	M130x2	M115x2	6~M20	30	24	63	165	43	49.75	19.75	77.5	72.2	62	25.5 or 22	6~M16
3H-15	A11	M130x2		M130x2		6~M20	30	28	63	165	43	49.75	19.75	77.5	72.2	62	25.5 or 22	3~M10
3H-18	A11	M130x2		M130x2		6~M20	30	28	63	165	43	83.5	20.5	80	74.7	62	25.5 or 22	3~M10

1. The dimensions and the specifications of 3H-A type are in red data.

- WEDGE-HOOK type 2-jaw with the large through-hole.
- Matching surfaces of all parts hardened, ground and lubricated directly.
- High rigidity and high clamping accuracy.

■ J is the hole diameter of blank draw nut.
If not notified, Autogrip will adopt the K Default as K value.
K is the maximum thread specification and it could be customize.

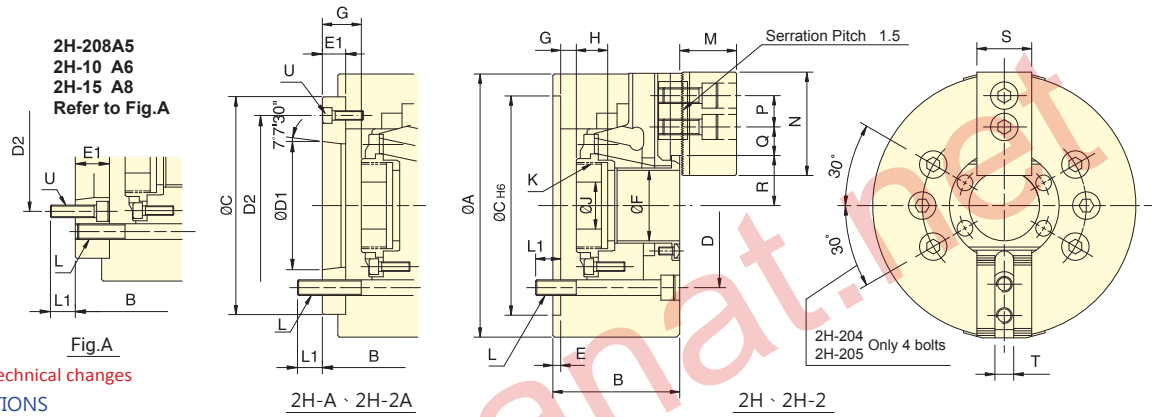

Subject to technical changes

SPECIFICATIONS

Model		Plunger stroke	Jaw stroke (Dia.)	Chucking Dia. Max.	Chucking Dia. Min.	Max. D.B. pull	Max. Clamping force	Max. speed	I Moment of inertia	Weight		Matching cyl.	Max. pressure
		mm	mm	mm	mm	kN (kgf)	kN (kgf)	min⁻¹ (r.p.m.)	kg·m²	kg			MPa (kgf/cm²)
2H-204	A4	13	5.5	113	7	9.2(940)	19.4(1980)	8000	0.012	4.2	4.8	TK-A528	1.3(13)
2H-205	A4	13	5.5	138	10	11.4(1167)	32(3260)	7000	0.02	6.8	7.6	TK-A533	1.6(16)
2H-206	A5	14	6	170	13	15.5(1580)	44.4(4530)	6000	0.06	13.1	14.9	TK-A646	1.6(16)
2H-208	A5	18	7.6	210	17	23.1(2360)	57.3(5840)	5000	0.17	21.3	24.2	TK-A853	1.8(18)
2H-208	A6	18	7.6	210	17	23.1(2360)	57.3(5840)	5000	0.17	21.3	22.4	TK-A853	1.5(15)
2H-10	A6	19	8.8	254	25	28.4(2900)	73.9(7540)	4200	0.31	33.5	40.5	TK-A1075	1.9(19)
2H-10	A8	19	8.8	254	25	28.4(2900)	73.9(7540)	4200	0.31	33.5	39.0	TK-A1075	1.9(19)
2H-12	A8	23	10.6	304	34	36.7(3740)	95.8(9780)	3300	0.70	59.7	62.7	TK-A1291	1.7(17)
2H-15	A8	23	10.6	381	50	46.9(4790)	119.6(12200)	2500	2.42	115	129	TK-A1512	1.5(15)
2H-15	A11	23	10.6	381	50	46.9(4790)	119.6(12200)	2500	2.34	115	122	TK-A1512	1.5(15)

DIMENSIONS

Model		A	B		C	D	D1	D2	E	E1	F	G max.		G min.		H	J
2H-204	A4	113	59	83	85	70.6	63.51	82.6	4	28	32	3.5	31.5	-9.5	18.5	17.5	12
2H-205	A4	138	60	71	110	82.6	63.51	96	4	15	39	1	16	-12	3	20	12
2H-206	A5	170	81	91	140	104.8	82.56	116	5	15	53	13	28	-1	14	17.5	20
2H-208	A5	210	91	109	170	133.4	82.56	104.8	5	23	66	16.5	39.5	-1.5	21.5	20	30
2H-208	A6	210	91	103	170	133.4	106.38	150	5	17	66	16.5	33.5	-1.5	15.5	20	30
2H-10	A6	254	100	120	220	171.4	106.38	133.4	5	25	75	8.5	33.5	-10.5	14.5	25	45
2H-10	A8	254	100	113	220	171.4	139.72	190	5	18	75	8.5	26.5	-10.5	7.5	25	45
2H-12	A8	304	110	122	220	171.4	139.72	190	6	18	91	8	26	-15	3	28	50
2H-15	A8	381	133	160	300	235	139.72	171.4	6	33	120	11	44	-12	21	39	60
2H-15	A11	381	133	149	300	235	196.87	260	6	22	120	11	33	-12	10	39	60

Model		K Default		K max.		L	L1		M	N	P	Q max.	Q min.	R max.	R min.	S	T	U
2H-204	A4	M32x1.5		M38x1.5		4~M10	16	15	24	52	14	12.75	6.75	25	22.25	23	10	3~M10
2H-205	A4	M40x1.5		M45x1.5		4~M10	14.5	14.5	31	62	14	20.25	6.75	29.5	26.75	25	10	3~M6
2H-206	A5	M55x2		M60x2		6~M10	16	16	37	73	20	22.75	9.25	36	33	31	12	3~M6
2H-208	A5	M60x2		M75x2		6~M12	17	18	38	95	25	23.7	10.2	45.7	41.9	35	14	6~M10
2H-208	A6	M60x2		M75x2		6~M12	17	15	38	95	25	23.7	10.2	45.7	41.9	35	14	3~M6
2H-10	A6	M85x2		M85x2		6~M16	22	18	43	110	30	33.8	14.3	51	46.6	40	16	6~M12
2H-10	A8	M85x2		M85x2		6~M16	22	24	43	110	30	33.8	14.3	51	46.6	40	16	3~M8
2H-12	A8	M100x2		M100x2		6~M16	23	25	51	130	30	45.8	15.8	61.3	56	50	21	3~M8
2H-15	A8	M130x2	M100x2	M130x2	M115x2	6~M20	30	24	63	165	43	47.3	18.2	80	74.7	62	25.5 or 22	6~M16
2H-15	A11	M130x2		M130x2		6~M20	30	28	63	165	43	47.3	18.2	80	74.7	62	25.5 or 22	3~M10

1. The dimensions and the specifications of 2H-2A、2H-A type are in red data.

4H/4H-A THRU-HOLE POWER CHUCK

4-JAW / Thru-Hole

- WEDGE-HOOK type 4-jaw with the large through-hole.
- Matching surfaces of all parts hardened, ground and lubricated directly.
- High rigidity and high clamping accuracy.

■ J is the hole diameter of blank draw nut.
K is the maximum thread specification and it could be customize.

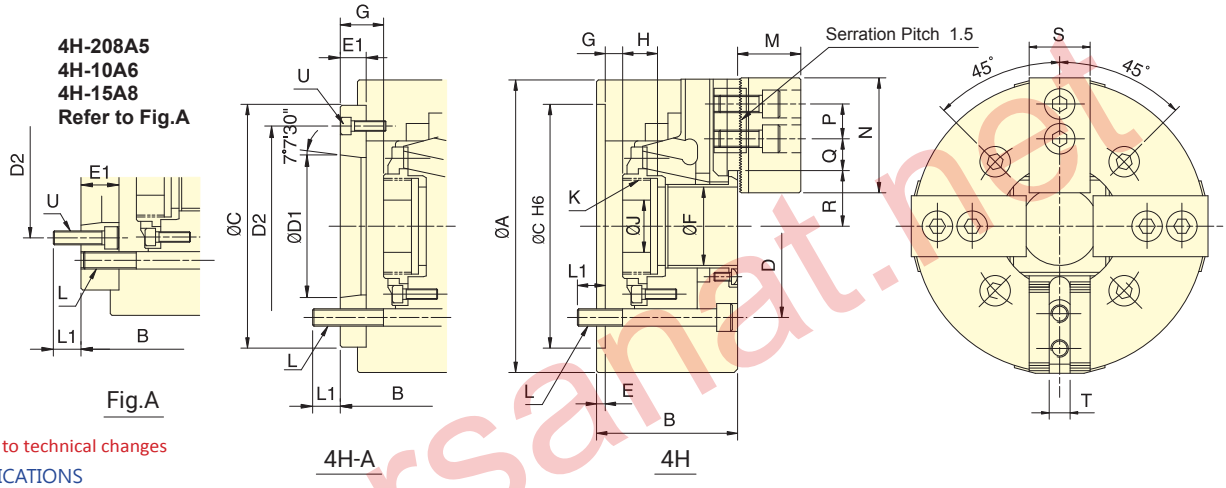

Subject to technical changes

SPECIFICATIONS

Model		Plunger stroke	Jaw stroke (Dia.)	Chucking Dia. Max.	Chucking Dia. Min.	Max. D.B. pull	Max. Clamping force	Max. speed	I Moment of inertia	Weight		Matching cyl.	Max. pressure
		mm	mm	mm	mm	kN (kgf)	kN (kgf)	min⁻¹ (r.p.m.)	kg·m²	kg			MPa (kgf/cm²)
4H-206	A5	14	6.0	170	13	23.2(2375)	66.7(6810)	5000	0.06	12.5	16.7	TK-C646	2.5(25)
4H-208	A5	18	7.6	210	17	34.3(3500)	85.8(8750)	4200	0.19	23.5	25.4	TK-A853	2.8(28)
4H-208	A6	18	7.6	210	17	34.3(3500)	85.8(8750)	4200	0.19	23.5	24.3	TK-A853	2.8(28)
4H-10	A6	19	8.8	254	25	42.6(4380)	110.7(11300)	3400	0.34	36.3	41	TK-A1075	2.8(28)
4H-10	A8	19	8.8	254	25	42.6(4380)	110.7(11300)	3400	0.34	36.3	39.3	TK-A1075	2.8(28)
4H-12	A8	23	10.6	304	34	54.9(5600)	143.6(14650)	2700	0.77	62	65.7	TK-A1291	2.5(25)
4H-15	A8	23	10.6	381	50	71(7250)	179.8(18350)	2000	2.5	123.7	137.7	TK-A1512	2.3(23)
4H-15	A11	23	10.6	381	50	71(7250)	179.8(18350)	2000	2.42	123.7	130.7	TK-A1512	2.3(23)
4H-18	A11	23	10.6	450	50	71(7250)	179.8(18350)	1700	4.85	170	184	TK-A1512	2.3(23)

DIMENSIONS

Model		A	B		C	D	D1	D2	E	E1	F	G max.		G min.		H	J
4H-206	A5	170	81	91	140	104.8	82.56	116	5	15	53	11	28	-1	18	17.5	20
4H-208	A5	210	91	109	170	133.4	82.56	104.8	5	23	66	14.5	37.5	-1.5	21.5	20.5	30
4H-208	A6	210	91	103	170	133.4	106.38	150	5	17	66	14.5	31.5	-1.5	15.5	20.5	30
4H-10	A6	254	100	120	220	171.4	106.38	133.4	5	25	75	8.5	33.5	-10.5	14.5	25	45
4H-10	A8	254	100	113	220	171.4	139.72	190	5	18	75	8.5	26.5	-10.5	7.5	25	45
4H-12	A8	304	110	122	220	171.4	139.72	190	6	18	91	10	28	-15	3	28	50
4H-15	A8	381	133	160	300	235	139.72	171.4	6	33	120	11	44	-12	21	39	60
4H-15	A11	381	133	149	300	235	196.87	260	6	22	120	11	33	-12	10	39	60
4H-18	A11	450	133	149	300	235	196.87	260	6	22	120	11	33	-12	10	39	60

Model		K Default		K max.		L	L1		M	N	P	Q max.	Q min.	R max.	R min.	S	T	U
4H-206	A5	M55x2		M60x2		4~M10	16	16	37	73	20	21.25	9.25	36	33	31	12	3~M6
4H-208	A5	M60x2		M75x2		4~M12	20	17	38	95	25	29.8	14.8	38.7	35	35	14	6~M10
4H-208	A6	M60x2		M75x2		4~M12	20	18	38	95	25	29.8	14.8	38.7	35	35	14	3~M6
4H-10	A6	M85x2		M85x2		4~M16	22	18	43	110	30	33.8	14.3	51	46.6	40	16	6~M12
4H-10	A8	M85x2		M85x2		4~M16	22	24	43	110	30	33.8	14.3	51	46.6	40	16	3~M8
4H-12	A8	M100x2		M100x2		4~M16	23	25	51.3	130	30	46.25	11.75	61.3	56	50	21	3~M8
4H-15	A8	M130x2	M100x2	M130x2	M115x2	4~M20	30	24	63	165	43	47.5	20.5	80	74.7	62	25.5 or 22	6~M16
4H-15	A11	M130x2		M130x2		4~M20	30	28	63	165	43	47.5	20.5	80	74.7	62	25.5 or 22	3~M10
4H-18	A11	M130x2		M130x2		4~M20	30	28	63	165	43	83.5	20.5	80	74.7	62	25.5 or 22	3~M10

1. The dimensions and the specifications of 4H-A type are in red data.

MINI POWER CHUCK(I)

3-JAW / Non-Thru-Hole

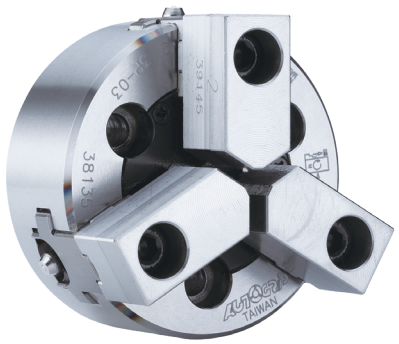

- WEDGE-HOOK type 3-jaw mini power chuck.
- Matching surfaces of all parts hardened, ground and lubricated directly.
- Suitable for bench lathe.

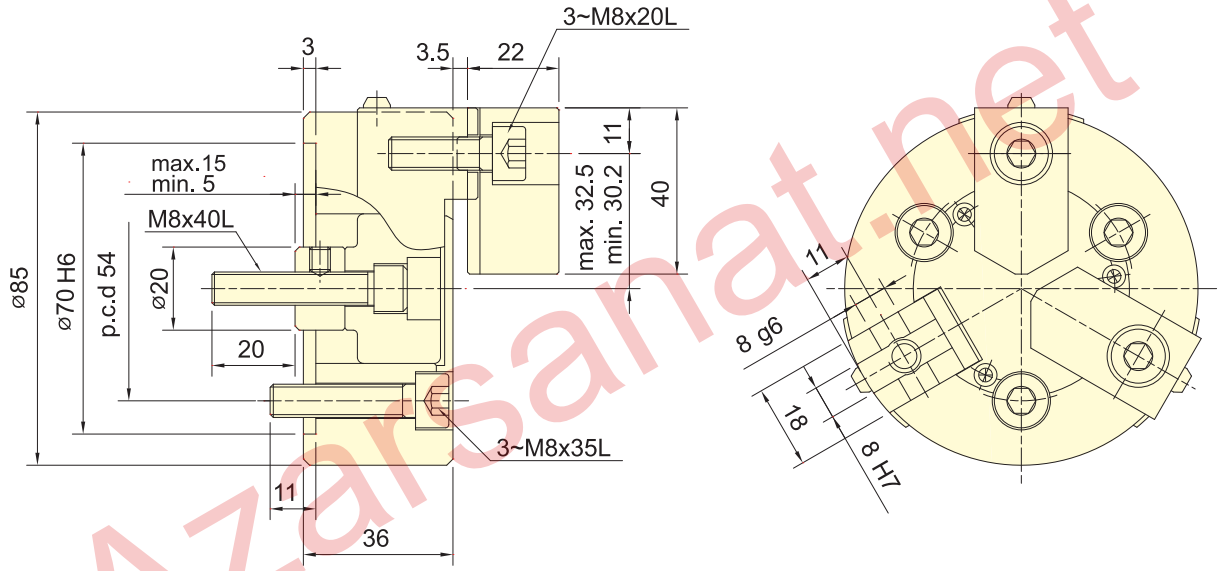

Subject to technical changes

SPECIFICATIONS

Model	Plunger stroke	Jaw stroke (Dia.)	Chucking Dia.		Max. D.B. pull	Max. Clamping force	Max. speed	I Moment of inertia	Weight	Matching cyl.	Max. pressure
			Max.	Min.							
	mm	mm	mm	mm	kN (kgf)	kN (kgf)	min^{-1} (r.p.m.)	$kg{\cdot}m^2$	kg		MPa (kgf/cm^2)
3P-03	10	4.6	85	3	4.5(460)	11.3(1150)	7000	0.004	1.8	RK-75	1.2(12.4)

Standard Soft Jaw For 3P-03 Power Chuck
SJ-K03

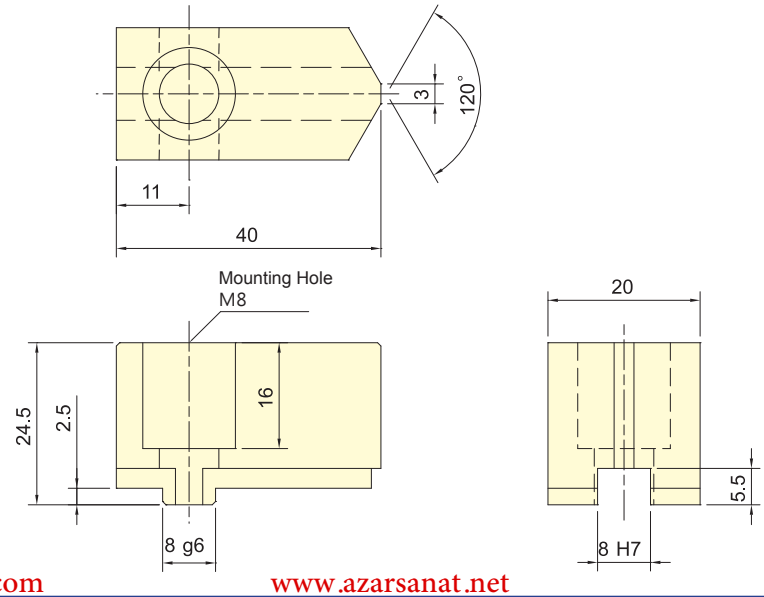

3P/3P-A POWER CHUCK (II)

3-JAW / Non-Thru-Hole

- WEDGE-HOOK type 3-jaw power chuck.
- Matching surfaces of all parts hardened, ground and lubricated directly.
- High rigidity and high clamping accuracy.

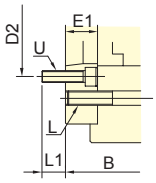

3P-08A5
3P-10A6
3P-12A6
Refer to Fig.A

Fig.A

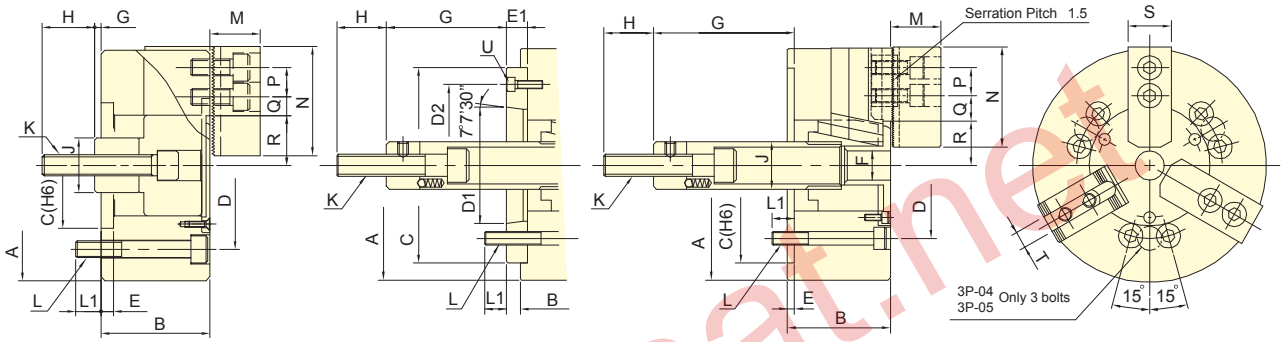

3P-04,3P-05 3P-A 3P

Subject to technical changes

SPECIFICATIONS

Model		Plunger stroke	Jaw stroke (Dia.)	Chucking Dia. Max.	Chucking Dia. Min.	Max. D.B. pull	Max. Clamping force	Max. speed	I Moment of inertia	Weight		Matching cyl.	Max. pressure
		mm	mm	mm	mm	kN (kgf)	kN (kgf)	min⁻¹ (r.p.m.)	kg·m²	kg			MPa (kgf/cm²)
3P-04		15	6.4	110	5	8.1(830)	22.5(2300)	6000	0.01	4.1	-	RK-75(N) RA-130	2.2(22) 0.6(6)
3P-05		15	6.4	135	14	8.1(830)	25(2550)	5500	0.02	6.2	-	RK-75(N) RA-130	2.2(22) 0.6(6)
3P-06	A5	20	8.5	165	16	17.9(1830)	52.4(5350)	5250	0.05	13	14	RK-100(N) RA-170	2.6(26) 0.6(6)
3P-08	A5	21	8.8	210	21	25(2550)	74.5(7600)	4750	0.14	24	28	RK-125(N) RA-220	2.3(23) 0.5(5)
3P-08	A6	21	8.8	210	21	25(2550)	74.5(7600)	4750	0.14	24	27	RK-125(N) RA-220	2.3(23) 0.5(5)
3P-10	A6	25	8.8	254	24	28.9(2950)	107.8(11000)	4000	0.3	35	42	RK-125(N) RA-220	2.6(26) 0.6(6)
3P-10	A8	25	8.8	254	24	28.9(2950)	107.8(11000)	4000	0.3	35	40	RK-125(N) RA-220	2.6(26) 0.6(6)
3P-12	A6	30	10.5	304	24	41(4180)	155.8(15900)	3360	0.73	59	65	RK-150(N) RA-270	2.6(26) 0.8(8)
3P-12	A8	30	10.5	304	24	41(4180)	155.8(15900)	3360	0.73	59	63	RK-150(N) RA-270	2.6(26) 0.8(8)

DIMENSIONS

Model		A	B		C	D	D1	D2	E	E1	F	G max.		G min.		H	J
3P-04		110	52	-	60	80	-	-	6	-	-	18	-	3	-	25	26
3P-05		135	55	-	80	100	-	-	7	-	-	9	-	-6	-	35	28
3P-06	A5	165	74	84	140	104.8	82.56	116	5	15	21	102.6	87.6	82.6	67.6	35	34
3P-08	A5	210	85	103	170	133.4	82.56	104.8	5	23	25	127	104	106	83	36	38
3P-08	A6	210	85	97	170	133.4	106.38	150	5	17	25	127	110	106	89	36	38
3P-10	A6	254	89	109	220	171.4	106.38	133.4	5	25	34	158	133	133	108	36	45
3P-10	A8	254	89	102	220	171.4	139.72	190	5	18	34	158	140	133	115	36	45
3P-12	A6	304	106	125	220	171.4	106.38	133.4	6	25	34	163	138	133	108	36	50
3P-12	A8	304	106	118	220	171.4	139.72	190	6	18	34	163	145	133	115	36	50

Model		K	L	L1		M	N	P	Q max.	Q min.	R max.	R min.	S	T	U
3P-04		M10x1.5	3~M8	12	-	24	52	14	11.2	6.7	23.6	20.4	23	10	-
3P-05		M12x1.75	3~M8	14	-	31	62	14	15.7	5.2	30.4	27.2	25	10	-
3P-06	A5	M16x2	6~M10	14	14	37	73	20	18.25	9.25	38.25	33.75	31	12	3~M6
3P-08	A5	M20x2.5	6~M12	20	17	38	95	25	25.25	11.75	46.3	41.9	35	14	6~M10
3P-08	A6	M20x2.5	6~M12	20	18	38	95	25	25.25	11.75	46.3	41.9	35	14	3~M6
3P-10	A6	M20x2.5	6~M16	18	18	43	110	30	35.25	12.75	51.1	46.7	40	16	6~M12
3P-10	A8	M20x2.5	6~M16	18	25	43	110	30	35.25	12.75	51.1	46.7	40	16	3~M8
3P-12	A6	M20x2.5	6~M16	18	18	51	130	30	48.75	12.75	61	55.75	50	18 or 21	6~M12
3P-12	A8	M20x2.5	6~M16	18	25	51	130	30	48.75	12.75	61	55.75	50	18 or 21	3~M8

1. The dimensions and the specifications of 3P-A type are in red data.

- WEDGE-HOOK type 3-jaw power chuck.
- Matching surfaces of all parts hardened, ground and lubricated directly.
- High rigidity and high clamping accuracy.

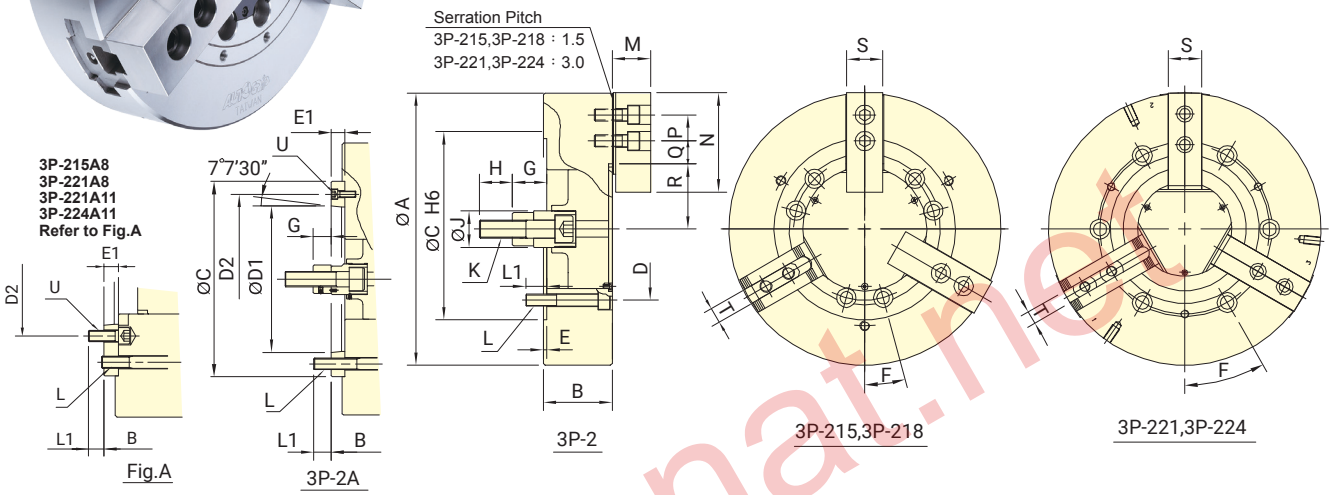

Subject to technical changes

SPECIFICATIONS

Model		Plunger stroke	Jaw stroke (Dia.)	Chucking Dia. Max.	Chucking Dia. Min.	Max. D.B. pull	Max. Clamping force	Max. speed	I Moment of inertia	Weight		Matching cyl.	Max. pressure
		mm	mm	mm	mm	kN (kgf)	kN (kgf)	min⁻¹ (r.p.m.)	kg·m²	kg			MPa (kgf/cm²)
3P-215	A8	35	16	381	50	82(8360)	249(25390)	3000	1.8	109.9	122.4	RH-200or RK-200(N)	2.8(28)
3P-215	A11	35	16	381	50	82(8360)	249(25390)	3000	1.8	109.9	116	RH-200or RK-200(N)	2.8(28)
3P-218	A11	35	16	450	60	82(8360)	249(25400)	2800	2.32	124	130	RH-200or RK-200(N)	2.8(28)
3P-221	A8	35	16	530	59	82(8360)	272.6(27800)	1900	4.9	177	200	RH-200or RK-200(N)	2.8(28)
3P-221	A11	35	16	530	59	82(8360)	272.6(27800)	1900	4.9	177	194	RH-200or RK-200(N)	2.8(28)
3P-224	A11	35	16	610	152	82(8360)	272.6(27800)	1750	7	230	246.28	RH-200or RK-200(N)	2.8(28)
3P-224	A15	35	16	610	152	82(8360)	272.6(27800)	1750	7	230	238.6	RH-200or RK-200(N)	2.8(28)

DIMENSIONS

Model		A	B		C	D	D1	D2	E	E1	F	G max.		G min.		H	J
3P-215	A8	381	114	141	300	235	139.72	171.4	6	33	15°	104	71	69	36	55	60
3P-215	A11	381	114	130	300	235	196.87	260	6	22	15°	104	82	69	47	55	60
3P-218	A11	450	114	130	300	235	196.87	260	6	22	15°	92	70	57	35	55	60
3P-221	A8	530	125	152	380	330.2	139.72	171.4	6	33	30°	97	64	62	29	55	60
3P-221	A11	530	125	146	380	330.2	196.87	235	6	27	30°	97	70	62	35	55	60
3P-224	A11	610	125	146	380	330.2	196.87	235	6	27	30°	97	70	62	35	55	60
3P-224	A15	610	125	146	380	330.2	285.78	330.2	6	27	30°	97	70	62	35	55	60

Model		K	L	L1		M	N	P	Q max.	Q min.	R max.	R min.	S	T	U
3P-215	A8	M30x3.5	6~M20	30	29	63.3	165	43	51.25	18.25	77.5	69.5	62	25.5	6~M16
3P-215	A11	M30x3.5	6~M20	30	33	63.3	165	43	51.25	18.25	77.5	69.5	62	25.5	3~M10
3P-218	A11	M30x3.5	6~M20	35	33	63.3	165	43	52.75	18.25	108	100	62	25.5	3~M10
3P-221	A8	M30x3.5	6~M24	31	24	71	180	60	96.5	24.5	86	78	65	25	6~M16
3P-221	A11	M30x3.5	6~M24	31	28	71	180	60	96.5	24.5	86	78	65	25	6~M20
3P-224	A11	M30x3.5	6~M24	31	28	71	180	60	96.5	24.5	125	117	65	25	6~M20
3P-224	A15	M30x3.5	6~M24	31	34	71	180	60	96.5	24.5	125	117	65	25	3~M12

1. The dimensions and the specifications of 3P-A type are in red data.

2P/2P-A POWER CHUCK

2-JAW / Non-Thru-Hole

- WEDGE-HOOK type 2-jaw power chuck.
- Matching surfaces of all parts hardened, ground and lubricated directly.
- High rigidity and high clamping accuracy.

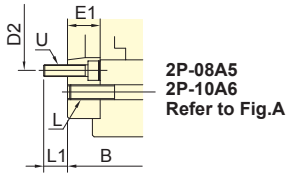

Fig.A

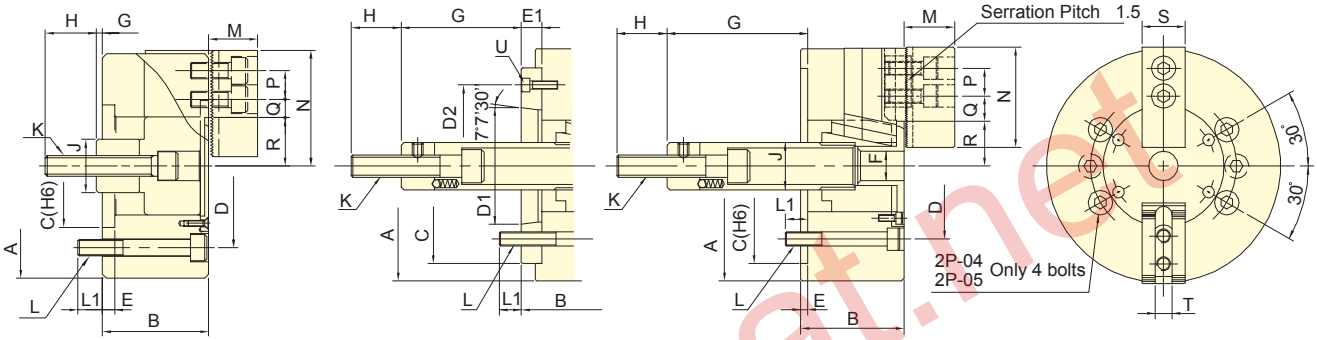

2P-04,2P-05 2P-A 2P

Subject to technical changes

SPECIFICATIONS

Model		Plunger stroke	Jaw stroke (Dia.)	Chucking Dia. Max.	Chucking Dia. Min.	Max. D.B. pull	Max. Clamping force	Max. speed	I Moment of inertia	Weight		Matching cyl.	Max. pressure
		mm	mm	mm	mm	kN (kgf)	kN (kgf)	min⁻¹ (r.p.m.)	kg·m²	kg			MPa (kgf/cm²)
2P-04		15	6.4	110	5	5.3(540)	14.7(1500)	6000	0.01	3.8	-	RK-75(N) RA-130	1.5(15) 0.4(4)
2P-05		15	6.4	135	14	5.3(540)	16.7(1700)	5500	0.02	5.8	-	RK-75(N) RA-130	1.5(15) 0.4(4)
2P-06	A5	20	8.5	165	14	12(1220)	35(3570)	5250	0.04	12	13	RK-100(N) RA-170	1.7(17) 0.4(4)
2P-08	A5	21	8.8	210	17	16.5(1680)	50(5100)	4750	0.13	22	26	RK-125(N) RA-220	1.5(15) 0.4(4)
2P-08	A6	21	8.8	210	17	16.5(1680)	50(5100)	4750	0.13	22	25	RK-125(N) RA-220	1.5(15) 0.4(4)
2P-10	A6	25	8.8	254	22	19.4(1980)	71.5(7300)	4000	0.29	33	42	RK-125(N) RA-220	1.8(18) 0.4(4)
2P-10	A8	25	8.8	254	22	19.4(1980)	71.5(7300)	4000	0.29	33	40	RK-125(N) RA-220	1.8(18) 0.4(4)
2P-12	A8	30	10.5	304	22	27.4(2800)	103.9(10600)	3360	0.70	57	61	RK-150(N)	1.7(17)
2P-15	A11	35	16	381	50	54.9(5600)	164.6(16800)	3000	1.70	96	103	RK-200(N)	1.9(19)

DIMENSIONS

Model		A	B		C	D	D1	D2	E	E1	F	G max.		G min.		H	J
2P-04		110	52	-	60	80	-	-	6	-	-	18	-	3	-	25	26
2P-05		135	55	-	80	100	-	-	7	-	-	9	-	6	-	35	28
2P-06	A5	165	74	84	140	104.8	82.56	116	5	15	21	102.6	87.6	82.6	67.6	35	34
2P-08	A5	210	85	103	170	133.4	82.56	104.8	5	23	25	127	104	106	83	36	38
2P-08	A6	210	85	97	170	133.4	106.38	150	5	17	25	127	110	106	89	36	38
2P-10	A6	254	89	109	220	171.4	106.38	133.4	5	25	34	158	133	133	108	36	45
2P-10	A8	254	89	102	220	171.4	139.72	190	5	18	34	158	140	133	115	36	45
2P-12	A8	304	106	118	220	171.4	139.72	190	6	18	34	163	145	133	115	36	50
2P-15	A11	381	114	130	300	235	196.87	260	6	22	-	104	82	69	47	55	60

Model		K	L	L1		M	N	P	Q max.	Q min.	R max.	R min.	S	T	U
2P-04		M10x1.5	4~M8	12	-	24	52	14	11.3	8.3	23.3	20.1	23	10	-
2P-05		M12x1.75	4~M8	14	-	31	62	14	13.5	6	30.4	27.2	25	10	-
2P-06	A5	M16x2	6~M10	14	14	37	73	20	18.25	9.25	38.25	34	31	12	3~M6
2P-08	A5	M20x2.5	6~M12	20	17	38	95	25	22.3	11.8	46.3	41.9	35	14	6~M10
2P-08	A6	M20x2.5	6~M12	20	18	38	95	25	22.3	11.8	46.3	41.9	35	14	3~M6
2P-10	A6	M20x2.5	6~M16	18	18	43	110	30	30.8	11.3	51.1	46.7	40	16	6~M12
2P-10	A8	M20x2.5	6~M16	18	25	43	110	30	30.8	11.3	51.1	46.7	40	16	6~M8
2P-12	A8	M20x2.5	6~M16	18	25	51	130	30	48.5	12.5	-	-	50	18 or 21	6~M8
2P-15	A11	M30x3.5	6~M20	30	33	63	165	43	48.8	23.3	77.5	69.5	62	25.5	3~M10

1. The dimensions and the specifications of 2P-A type are in red data.

EXTRA LONG JAW STROKE POWER CHUCK

- CRANK type single-jaw with the large through-hole and extra long jaw stroke.
- Suitable for clamping the jig or irregular work piece.
- High rigidity and high clamping accuracy.

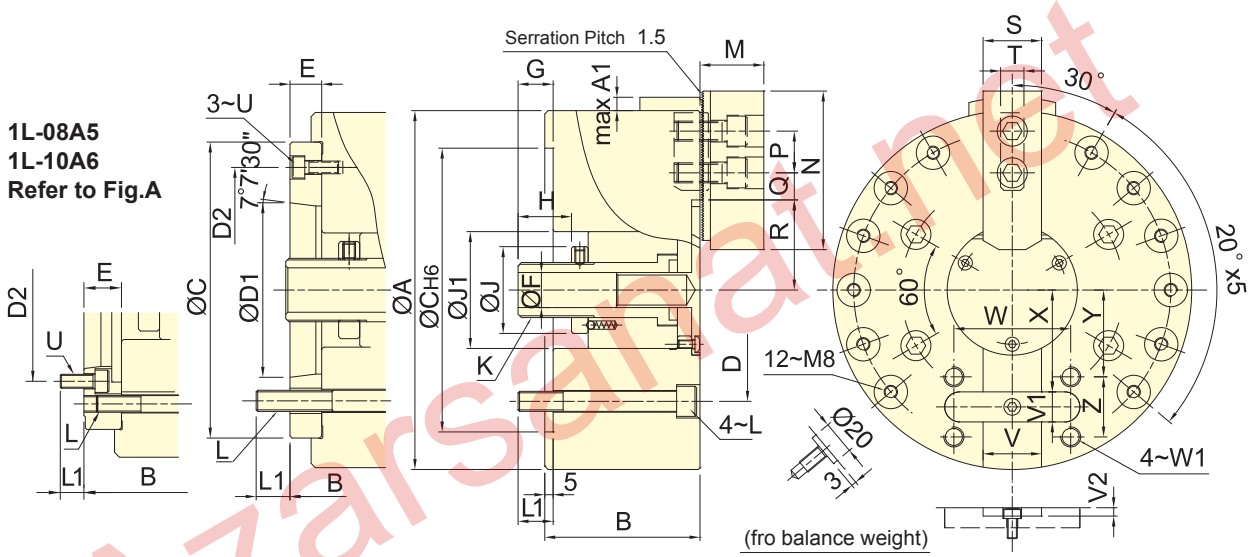

Subject to technical changes

SPECIFICATIONS

Model		Plunger stroke	Jaw stroke	Chucking Dia. Max.	Chucking Dia. Min.	Max. D.B. pull	Max. Clamping force	Max. speed	I Moment of inertia	Weight		Matching cyl.	Max. pressure
		mm	mm	mm	mm	kN (kgf)	kN (kgf)	min⁻¹ (r.p.m.)	kg·m²	kg			MPa (kgf/cm²)
1L-06	A5	20	16	168	5	12.3(1250)	27.3(2780)	3800	0.05	12.5	14.3	RK-100	1.7(17.5)
1L-08	A5	25	20	215	7	15.7(1600)	37.2(3800)	3000	0.15	24.2	27.1	RK-125	1.4(14.3)
1L-08	A6	25	20	215	7	15.7(1600)	37.2(3800)	3000	0.15	24.2	25.3	RK-125	1.4(14.3)
1L-10	A6	30	24	254	17	21.6(2200)	48.5(4950)	2400	0.28	38.8	46	RK-125	1.9(19.5)
1L-10	A8	30	24	254	17	21.6(2200)	48.5(4950)	2400	0.28	38.8	44.3	RK-125	1.9(19.5)

DIMENSIONS

Model		A	A1	B		C	D	D1	D2	E	F	G max.	G min.	H	J	J1	K max.	L	L1	
1L-06	A5	168	9.5	80	90	140	104.8	82.56	116	15	21	37	17	25	46	54	M30x1.5	M10	16	16
1L-08	A5	215	8	93	111	170	133.4	82.56	104.8	23	21	46	21	32	52	70	M33x1.5	M12	21	19
1L-08	A6	215	8	93	105	170	133.4	106.38	150	17	21	46	21	32	52	70	M33x1.5	M12	21	20
1L-10	A6	254	13.5	108	128	220	171.4	106.38	133.4	25	30	47	17	30	62	90	M45x1.5	M16	25	20
1L-10	A8	254	13.5	108	121	220	171.4	139.72	190	18	30	47	17	30	62	90	M45x1.5	M16	25	27

Model		M	N	P	Q max.	Q min.	R max.	R min.	S	T	U	V(H6)	V1(h9)	V2	W	W1	X	Y	Z
1L-06	A5	37	73	20	19.75	7.75	46	30	31	12	M6	30	15	4.5	64	M10	44.5	36	30
1L-08	A5	38	95	25	25.25	10.25	54	34	35	14	M10	35	18	4.5	70	M12	61	52	36
1L-08	A6	38	95	25	25.25	10.25	54	34	35	14	M6	35	18	4.5	70	M12	61	52	36
1L-10	A6	43	110	30	33.75	11.25	67	43	40	16	M8	40	20	5	90	M12	71	58.5	45
1L-10	A8	43	110	30	33.75	11.25	67	43	40	16	M8	40	20	5	90	M12	71	58.5	45

1. The dimensions and the specifications of 1L-A type are in red data.

3L/3L-A

EXTRA LONG JAW STROKE POWER CHUCK

3-JAW / Thru-Hole

- CRANK type 3-jaw with the large through-hole, and extra long jaw stroke.
- Matching surfaces of all parts hardened, ground and lubricated directly.
- High rigidity and high clamping accuracy.

■ J is the hole diameter of blank draw nut.
K is the maximum thread specification and it could be customize.

3L-15A8
Refer to Fig.A

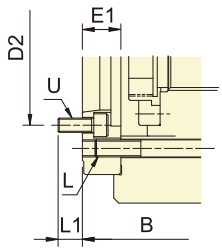

Fig.A

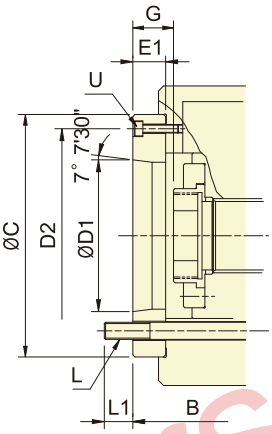

3L-A

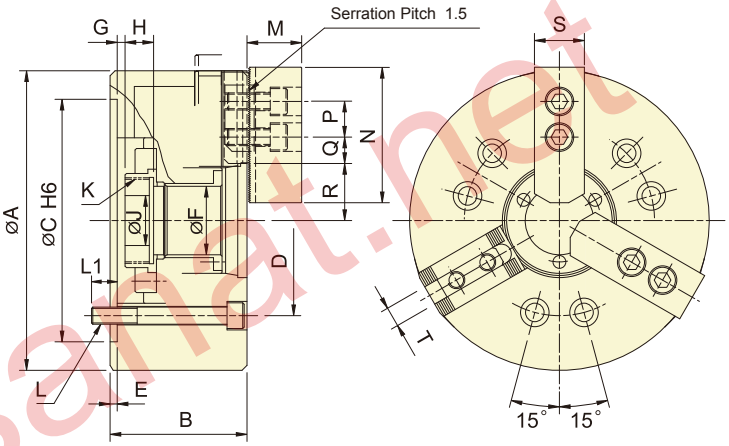

3L

3L-208A5
3L-210A6
Refer to Fig.B

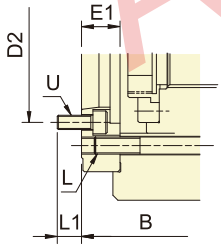

Fig.B

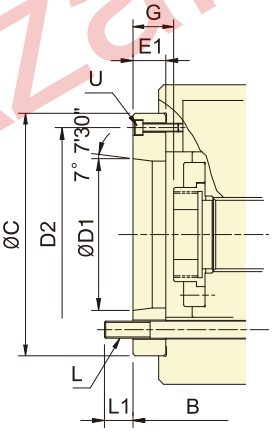

3L-2A

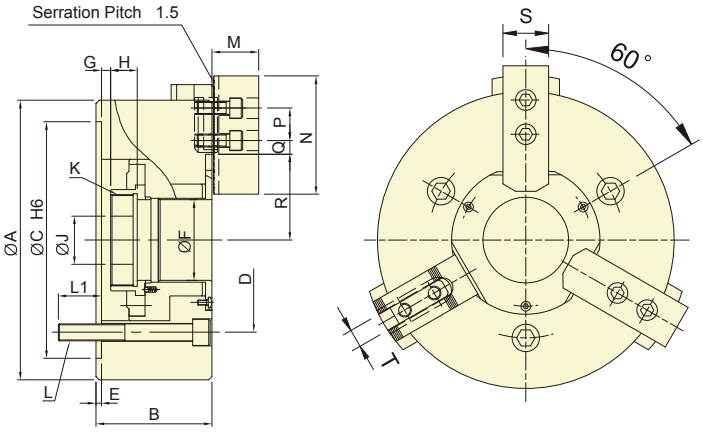

3L-2

Subject to technical changes

SPECIFICATIONS

Model		Plunger stroke	Jaw stroke (Dia.)	Chucking Dia. Max.	Chucking Dia. Min.	Max. D.B. pull	Max. Clamping force	Max. speed	I Moment of inertia	Weight		Matching cyl.	Max. pressure
		mm	mm	mm	mm	kN (kgf)	kN (kgf)	min^{-1} (r.p.m.)	$kg{\cdot}m^2$	kg			MPa (kgf/cm^2)
3L-205	A4	12	18	138	6	15.6(1590)	17.2(1750)	4200	0.019	7.2	8	TK-A533	2.3(23)
3L-206	A5	15	24	170	24	23.5(2400)	26.0(2650)	3600	0.063	14.7	15.9	TK-C646	2.7(27)
3L-208	A5	20	32	215	30	34.3(3500)	35.0(3570)	3000	0.18	23	25.7	TK-A853	2.8(28)
3L-208	A6	20	32	215	30	34.3(3500)	35.0(3570)	3000	0.18	23	24.6	TK-A853	2.8(28)
3L-210	A6	25	37.5	260	53	47.7(4870)	48.0(4895)	2400	0.35	39.5	46.5	TK-A1075	3.1(31)
3L-210	A8	25	37.5	260	53	47.7(4870)	48.0(4895)	2400	0.35	39.5	45	TK-A1075	3.1(31)
3L-212	A8	30	45	315	61	64.7(6600)	61.0(6220)	2100	0.827	67.3	70.5	TK-A1291	3.0(30)
3L-15	A8	35	52	385	26	84.3(8600)	68.0(6930)	1600	2.58	136	150	TK-A1512	2.7(27)
3L-15	A11	35	52	385	26	84.3(8600)	68.0(6930)	1600	2.58	136	143	TK-A1512	2.7(27)

1. The dimensions and the specifications of 3L-A type are in red data.

EXTRA LONG JAW STROKE POWER CHUCK

DIMENSIONS

Model		A	B		C	D	D1	D2	E	E1	F	G max.		G min.		H	J
3L-205	A4	138	65	76	110	82.6	63.51	96	4	15	32	1	15	-11	3	20	12
3L-206	A5	170	84	97	140	104.8	82.56	116	5	18	45	6.5	24.5	-8.5	9.5	19	20
3L-208	A5	215	96	114	170	133.4	82.56	104.8	5	23	52	7	30	-13	10	20	30
3L-208	A6	215	96	114	170	133.4	106.38	150	5	23	52	7	30	-13	10	20	30
3L-210	A6	260	108	128	220	171.4	106.38	133.4	5	25	75	8.5	33	-16.5	8	25	45
3L-210	A8	260	108	121	220	171.4	139.72	190	5	18	75	8.5	26.5	-16.5	1.5	25	45
3L-212	A8	315	125	138	220	171.4	139.72	190	5	18	91	15	33	-15	3	30	50
3L-15	A8	385	150	177	300	235	139.72	171.4	6	33	120	12.5	45.5	-22.5	10.5	39	60
3L-15	A11	385	150	166	300	235	196.87	260	6	22	120	12.5	34.5	-22.5	-0.5	39	60

Model		K max.		L	L1		M	N	P	Q max.	Q min.	R max.	R min.	S	T	U
3L-205	A4	M40x1.5		3~M10	15	15	31	62	14	15.75	5.25	38.5	29.5	25	10	3~M6
3L-206	A5	M55x2		3~M10	18	15	37	73	20	15.25	7.75	51	39	31	12	3~M6
3L-208	A5	M60x2		3~M12	18	19	38	95	25	19.25	10.25	63.5	47.5	35	14	6~M10
3L-208	A6	M60x2		3~M12	18	20	38	95	25	19.25	10.25	63.5	47.5	35	14	3~M6
3L-210	A6	M85x2	M60x2	3~M16	24	20	43	110	30	24.75	11.25	80	61.25	40	16	3~M12
3L-210	A8	M85x2		3~M16	24	21	43	110	30	24.75	11.25	80	61.25	40	16	3~M8
3L-212	A8	M100x2		3~M16	24	21	51	130	30	29.75	13.25	96.5	74	50	21	3~M8
3L-15	A8	M130x2		6~M20	33	31	63	165	43	51.25	27.25	94.25	68.25	62	25.5	6~M16
3L-15	A11	M130x2		6~M20	33	31	63	165	43	51.25	27.25	94.25	68.25	62	25.5	3~M10

1. The dimensions and the specifications of 3L-A type are in red data.

2L/2L-A

EXTRA LONG JAW STROKE POWER CHUCK

2-JAW / Thru-Hole

- CRANK type 2-jaw with the large through-hole and extra long jaw stroke.
- Matching surfaces of all parts hardened, ground and lubricated directly.
- High rigidity and high clamping accuracy.

■ J is the hole diameter of blank draw nut.
K is the maximum thread specification and it could be customize.

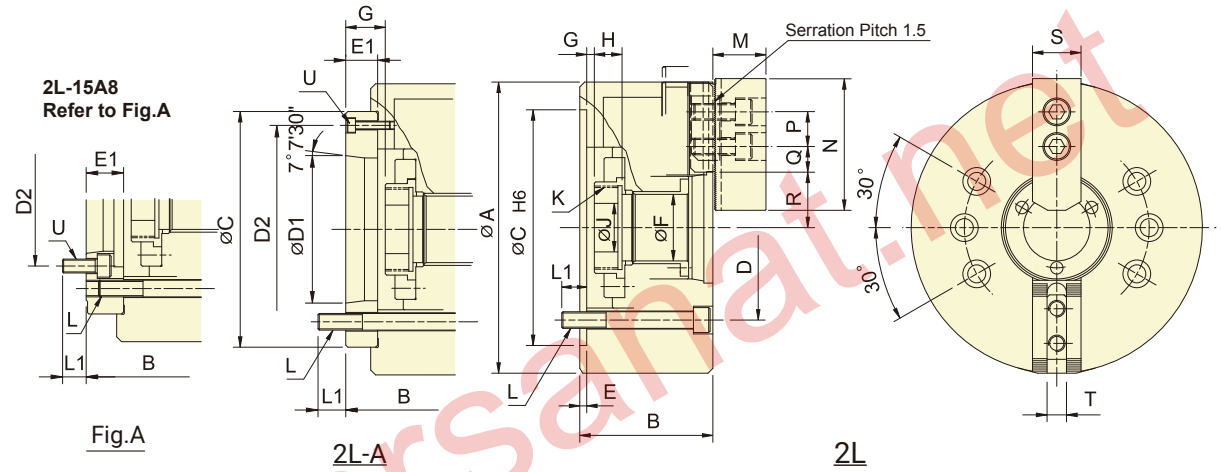

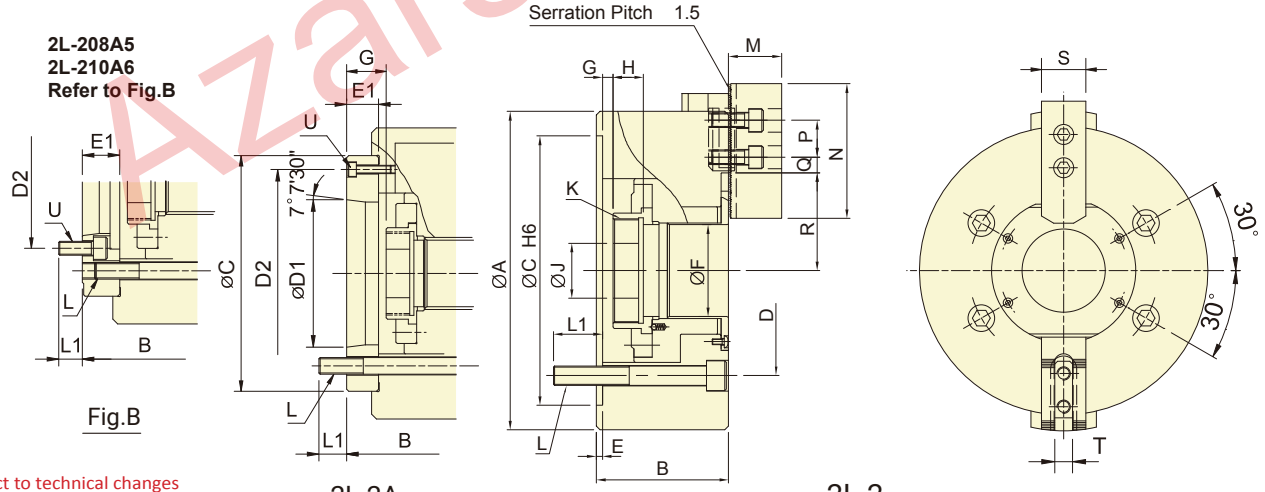

Subject to technical changes

SPECIFICATIONS

Model		Plunger stroke	Jaw stroke (Dia.)	Chucking Dia. Max.	Chucking Dia. Min.	Max. D.B. pull	Max. Clamping force	Max. speed	I Moment of inertia	Weight		Matching cyl.	Max. pressure
		mm	mm	mm	mm	kN (kgf)	kN (kgf)	min⁻¹ (r.p.m.)	kg·m²	kg			MPa (kgf/cm²)
2L-205	A4	12	18	138	6	10.4(1060)	11.4(1170)	4200	0.018	6.9	7.7	TK-A533	1.5(15)
2L-206	A5	15	24	170	24	15.7(1600)	17.3(1760)	3600	0.063	14.4	15.6	TK-C646	1.8(18)
2L-208	A5	20	32	215	30	22.9(2330)	27.1(2760)	3000	0.173	22	26	TK-A853	1.9(19)
2L-208	A6	20	32	215	30	22.9(2330)	27.1(2760)	3000	0.173	22	24.2	TK-A853	1.9(19)
2L-210	A6	25	37.5	260	53	31.8(3250)	37.3(3800)	2400	0.33	40	45.5	TK-A1075	2.1(21)
2L-210	A8	25	37.5	260	53	31.8(3250)	37.3(3800)	2400	0.33	40	44	TK-A1075	2.1(21)
2L-12	A8	30	45	304	30	43.1(4400)	50.0(5100)	2100	0.8	60	65.5	TK-A1291	2.0(20)
2L-15	A8	35	52	385	26	56.2(5730)	53.0(5400)	1600	2.52	133	147	TK-A1512	1.8(18)
2L-15	A11	35	52	385	26	56.2(5730)	53.0(5400)	1600	2.52	133	140	TK-A1512	1.8(18)

1.The dimensions and the specifications of 2L-A type are in red data.

EXTRA LONG JAW STROKE POWER CHUCK

DIMENSIONS

Model		A	B		C	D	D1	D2	E	E1	F	G max.		G min.		H	J
2L-205	A4	138	65	76	110	82.6	63.51	96	4	15	32	1	15	-11	3	20	12
2L-206	A5	170	84	97	140	104.8	82.56	116	5	18	45	6.5	24.5	-8.5	9.5	19	20
2L-208	A5	215	96	114	170	133.4	82.56	104.8	5	23	52	7	30	-13	10	20	30
2L-208	A6	215	96	114	170	133.4	106.38	150	5	23	52	7	30	-13	10	20	30
2L-210	A6	260	108	128	220	171.4	106.38	133.4	5	25	75	8.5	33	-16.5	8	25	45
2L-210	A8	260	108	121	220	171.4	139.72	190	5	18	75	8.5	26.5	-16.5	1.5	25	45
2L-12	A8	304	127	140	220	171.4	139.72	190	5	18	91	15	33	-15	3	28	50
2L-15	A8	385	150	177	300	235	139.72	171.4	6	33	120	12.5	45.5	-22.5	10.5	39	60
2L-15	A11	385	150	166	300	235	196.87	260	6	22	120	12.5	34.5	-22.5	-0.5	39	60

Model		K max.		L	L1		M	N	P	Q max.	Q min.	R max.	R min.	S	T	U
2L-205	A4	M40x1.5		4~M10	15	15	31	62	14	15.75	5.25	38.5	29.5	25	10	3~M6
2L-206	A5	M55x2		4~M10	18	15	37	73	20	15.25	7.75	51	39	31	12	3~M6
2L-208	A5	M60x2		4~M12	18	19	38	95	25	19.25	10.25	63.5	47.5	35	14	6~M10
2L-208	A6	M60x2		4~M12	18	20	38	95	25	19.25	10.25	63.5	47.5	35	14	3~M6
2L-210	A6	M85x2	M60x2	4~M16	24	20	43	110	30	24.75	11.25	80	61.25	40	16	6~M12
2L-210	A8	M85x2		4~M16	24	21	43	110	30	24.75	11.25	80	61.25	40	16	3~M8
2L-12	A8	M100x2		6~M16	22	19	51	130	30	46.25	19.25	77	54.5	50	21	3~M8
2L-15	A8	M130x2		6~M20	33	27.5	63	165	43	51.25	27.25	94.25	68.25	62	25.5	6~M16
2L-15	A11	M130x2		6~M20	33	31	63	165	43	51.25	27.25	94.25	68.25	62	25.5	3~M10

1.The dimensions and the specifications of 2L-A type are in red data.

LONG JAW STROKE POWER CHUCK(I)

3-JAW / Non-Thru-Hole

- WEDGE-HOOK type 3-jaw power chuck, and extra long jaw stroke.
- Matching surfaces of all parts hardened, ground and lubricated directly.
- High rigidity and high clamping accuracy.

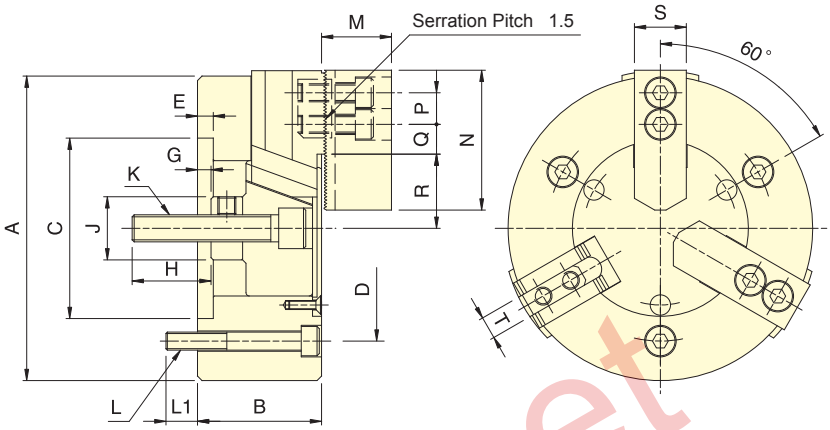

3M-05

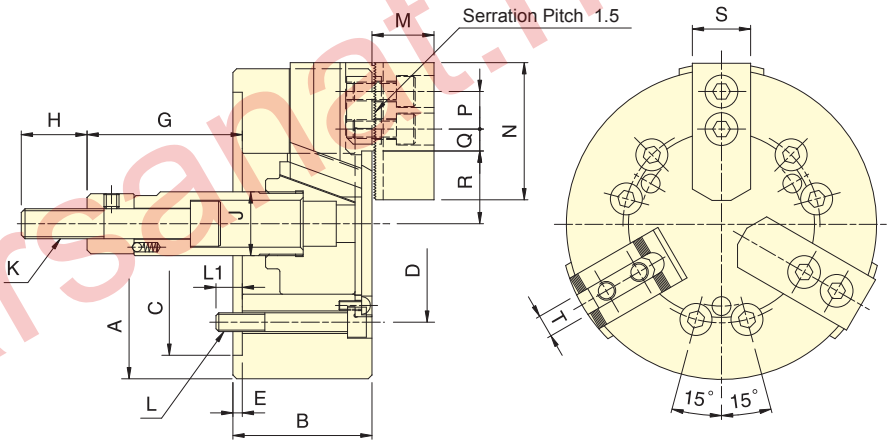

3M-06~3M-12

Subject to technical changes

SPECIFICATIONS

Model	Plunger stroke	Jaw stroke (Dia.)	Chucking Dia.		Max. D.B. pull	Max. Clamping force	Max. speed	I Moment of inertia	Weight	Matching cyl.	Max. pressure
			Max.	Min.							
	mm	mm	mm	mm	kN (kgf)	kN (kgf)	min^{-1} (r.p.m.)	$kg{\cdot}m^2$	kg		MPa (kgf/cm^2)
3M-05	15	10.9	135	14	9.8(1000)	16.4(1670)	4500	0.02	6.0	RK-75(N)	2.7(27)
3M-06	20	14.5	165	14	21.6(2200)	36(3680)	4000	0.04	12.2	RK-100(N)	3.0(30)
3M-08	23	16.7	210	17	29.4(3000)	54.9(5600)	3500	0.13	23.0	RK-125(N)	2.9(29)
3M-10	27	19.6	254	22	39.2(4000)	74(7550)	3000	0.3	34.3	RK-150(N)	2.8(28)
3M-12	30	21.8	304	26	54(5500)	99(10100)	2500	0.71	59.4	RK-150(N)	3.6(36)

DIMENSIONS

Model	A	B	C(H6)	D	E	G max.	G min.	H	J	K
3M-05	135	55	80	100	7	6	-9	35	28	M12x1.75
3M-06	165	74	140	104.8	5	101.6	81.6	36	34	M16x2
3M-08	210	85	170	133.4	5	129	106	36	38	M20x2.5
3M-10	254	89	220	171.4	5	160	133	36	45	M20x2.5
3M-12	304	106	220	171.4	6	70	40	46	50	M24x3

Model	L	L1	M	N	P	Q max.	Q min.	R max.	R min.	S	T
3M-05	3~M8	14	31	62	14	15.5	5	32.9	27.45	25	10
3M-06	6~M10	14	37	73	20	17	8	38.7	31.45	31	12
3M-08	6~M12	20	38	95	25	22.3	8.8	47.5	39.15	35	14
3M-10	6~M16	18	43	110	30	32.3	12.8	53.9	44.1	40	16
3M-12	6~M16	18	51	130	30	47.8	13.3	62.5	51.6	50	21

- WEDGE-HOOK type 3-jaw power chuck and extra long jaw stroke.
- Matching surfaces of all parts hardened, ground and lubricated directly.
- High rigidity and high clamping accuracy.

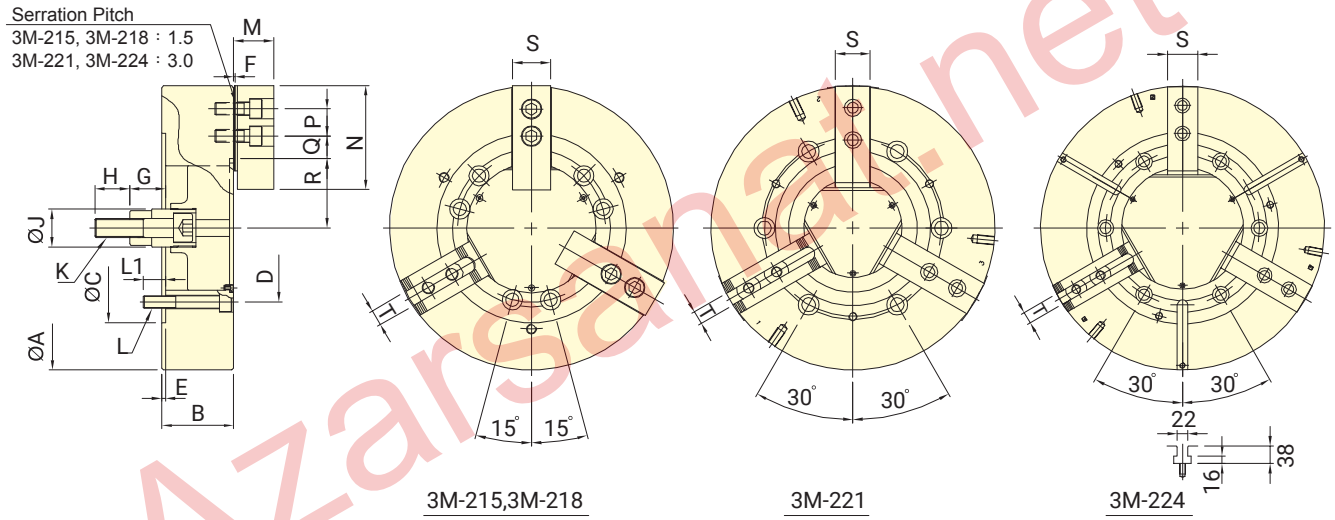

Subject to technical changes

SPECIFICATIONS

Model	Plunger stroke	Jaw stroke (Dia.)	Chucking Dia.		Max. D.B. pull	Max. Clamping force	Max. speed	I Moment of inertia	Weight	Matching cyl.	Max. pressure
			Max.	Min.							
	mm	mm	mm	mm	kN (kgf)	kN (kgf)	min^{-1} (r.p.m.)	$kg{\cdot}m^2$	kg		MPa (kgf/cm^2)
3M-215	35	25.4	381	20	91.0(9280)	158.9(16200)	2300	1.8	96	RK-200(N)	3.0(30)
3M-218	35	25.4	450	51	91.0(9280)	158.9(16200)	2000	2.32	124	RK-200(N)	3.0(30)
3M-221	35	25.4	530	53	91.0(9280)	158.9(16200)	1350	4.9	175	RK-200(N)	3.0(30)
3M-224	35	25.4	610	160	91.0(9280)	158.9(16200)	1250	7.2	225	RK-200(N)	3.0(30)

DIMENSIONS

Model	A	B	C(H6)	D	E	F	G max.	G min.	H	J
3M-215	381	114	300	235	6	2	104	69	55	60
3M-218	450	114	300	235	6	2	92	57	55	60
3M-221	530	125	380	330.2	6	3	97	62	55	60
3M-224	610	125	380	330.2	6	3	97	62	55	60

Model	K	L	L1	M	N	P	Q max.	Q min.	R max.	R min.	S	T
3M-215	M30x3.5	6~M20	30	63.3	165	43	49.75	18.25	79	66.3	62	25.5
3M-218	M30x3.5	6~M20	35	63.3	165	43	51.25	18.25	109.5	96.8	62	25.5
3M-221	M30x3.5	6~M24	31	71	180	60	90.5	24.5	92	79.3	65	25
3M-224	M30x3.5	6~M24	31	71	180	60	90	24	131	118.3	65	25

2M LONG JAW STROKE POWER CHUCK

2-JAW / Non-Thru-Hole

- WEDGE-HOOK type 2-jaw power chuck and extra long jaw stroke.
- Matching surfaces of all parts hardened, ground and lubricated directly.
- High rigidity and high clamping accuracy.

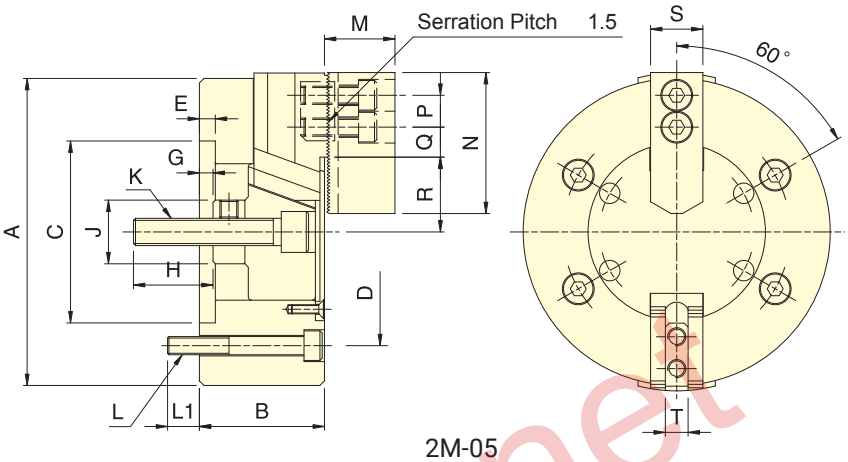

2M-05

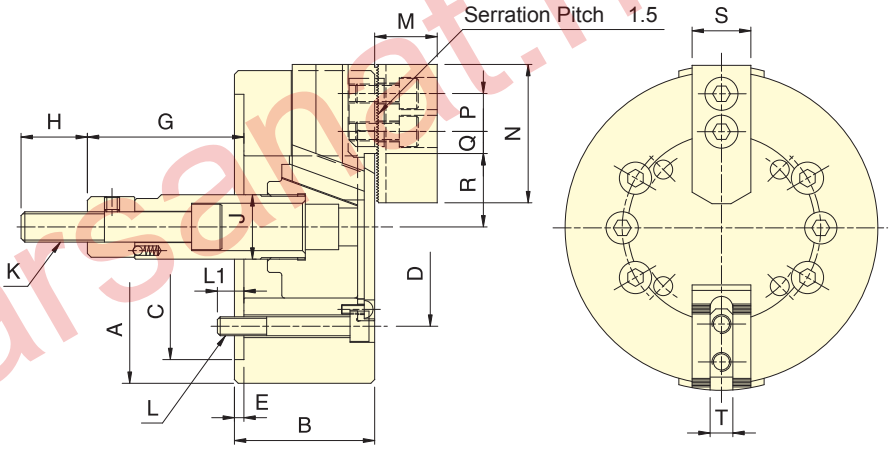

2M-06~2M-12

Subject to technical changes

SPECIFICATIONS

Model	Plunger stroke	Jaw stroke (Dia.)	Chucking Dia.		Max. D.B. pull	Max. Clamping force	Max. speed	I Moment of inertia	Weight	Matching cyl.	Max. pressure
			Max.	Min.							
	mm	mm	mm	mm	kN (kgf)	kN (kgf)	min^{-1} (r.p.m.)	$kg{\cdot}m^2$	kg		MPa (kgf/cm^2)
2M-05	15	10.9	135	14	6.5(660)	11(1120)	4500	0.02	6.0	RK-75(N)	1.8(18)
2M-06	20	14.5	165	14	14.3(1460)	24(2450)	4000	0.04	12.2	RK-100(N)	2.0(20)
2M-08	23	16.7	210	17	19.6(2000)	36.6(3730)	3500	0.13	23.0	RK-125(N)	1.9(19.3)
2M-10	27	19.6	254	22	26.1(2660)	49.3(5030)	3000	0.30	34.3	RK-150(N)	1.8(18.6)
2M-12	30	21.8	304	26	36(3670)	66(6730)	2500	0.71	59.1	RK-150(N)	2.4(24)

DIMENSIONS

Model	A	B	C(H6)	D	E	G max.	G min.	H	J
2M-05	135	55	80	100	7	6	-9	35	28
2M-06	165	74	140	104.8	5	101.6	81.6	36	34
2M-08	210	85	170	133.4	5	129	106	36	38
2M-10	254	89	220	171.4	5	160	133	36	45
2M-12	304	106	220	171.4	6	70	40	46	50

Model	K	L	L1	M	N	P	Q max.	Q min.	R max.	R min.	S	T
2M-05	M12x1.75	4~M8	14	31	62	14	15.5	5	32.9	27.45	25	10
2M-06	M16x2	6~M10	14	37	73	20	17	8	38.7	31.45	31	12
2M-08	M20x2.5	6~M12	20	38	95	25	22.3	8.8	47.5	39.15	35	14
2M-10	M20x2.5	6~M16	18	43	110	30	32.3	12.8	53.9	44.1	40	16
2M-12	M24x3	6~M16	18	51	130	30	47.8	13.3	62.5	51.6	50	21

POWER CHUCK FOR VERTICAL LATHE(I)

3-JAW / Non-Thru-Hole

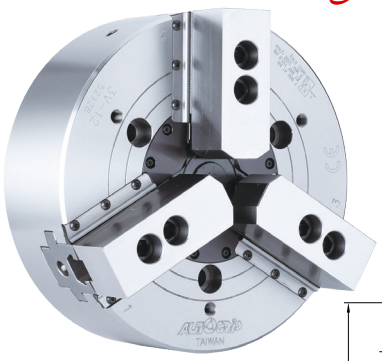

- WEDGE-HOOK type 3-jaw high speed power chuck.
- Sealed against swarf, chips and coolant, suitable for vertical lathe.

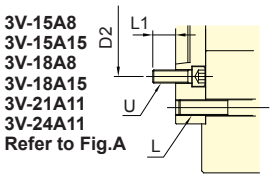

Fig.A

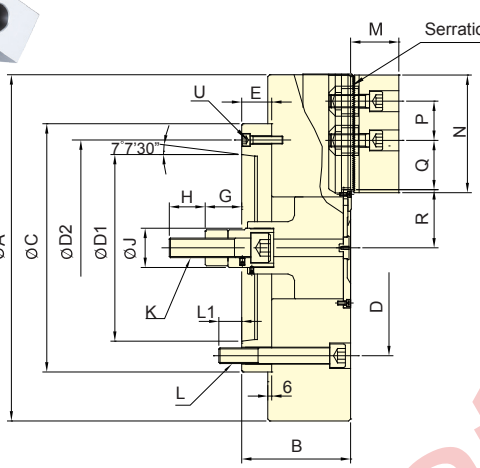

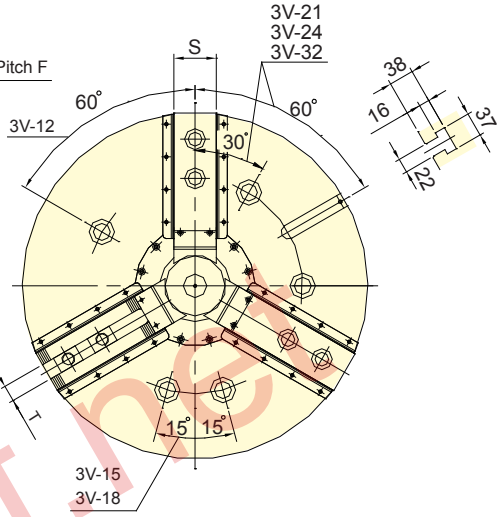

Subject to technical changes

SPECIFICATIONS

Model		Plunger stroke	Jaw stroke (Dia.)	Chucking Dia. Max.	Chucking Dia. Min.	Max. D.B. pull	Max. Clamping force	Max. speed	I Moment of inertia	Weight	Matching cyl.	Max. pressure
		mm	mm	mm	mm	kN (kgf)	kN (kgf)	min⁻¹ (r.p.m.)	kg·m²	kg		MPa (kgf/cm²)
3V-12	A8	30	12.7	304	30	41(4180)	156(15900)	3150	0.8	66	RK-150 RE-150	2.9(29)
3V-15	A8	35	16	381	30	81.9(8360)	245.1(25000)	2900	2.3	130	RK-200 RE-200K	3.2(32) 3.4(34)
3V-15	A11	35	16	381	30	81.9(8360)	245.1(25000)	2900	2.3	129		
3V-15	A15	35	16	381	30	81.9(8360)	245.1(25000)	2900	2.7	137		
3V-18	A8	35	16	450	80	81.9(8360)	245.1(25000)	2600	3.3	159		
3V-18	A11	35	16	450	80	81.9(8360)	245.1(25000)	2600	3.3	158		
3V-18	A15	35	16	450	80	81.9(8360)	245.1(25000)	2600	3.7	165		
3V-21	A11	35	16	530	62	81.9(8360)	271.6(27700)	1800	5.3	229		
3V-21	A15	35	16	530	62	81.9(8360)	271.6(27700)	1800	5.2	222		
3V-24	A11	35	16	610	136	81.9(8360)	271.6(27700)	1700	7.6	270		
3V-24	A15	35	16	610	136	81.9(8360)	271.6(27700)	1700	7.3	263		
3V-32	A15	35	16	800	136	81.9(8360)	271.6(27700)	1100	36.2	430		

DIMENSIONS

Model		A	B	C	D	D1	D2	E	F	G max.	G min.	H	J	K
3V-12	A8	304	141	220	171.4	139.72	190	40	1.5	73	43	36	50	M20x2.5
3V-15	A8	381	164	300	235	139.72	171.4	54	1.5	99	64	55	60	M30x3.5
3V-15	A11	381	168	300	235	196.87	260	58	1.5	95	60	55	60	M30x3.5
3V-15	A15	381	172	380	235	285.78	330.2	62	1.5	91	56	55	60	M30x3.5
3V-18	A8	450	164	300	235	139.72	171.4	54	1.5	99	64	55	60	M30x3.5
3V-18	A11	450	168	300	235	196.87	260	58	1.5	95	60	55	60	M30x3.5
3V-18	A15	450	172	380	235	285.78	330.2	62	1.5	91	56	55	60	M30x3.5
3V-21	A11	530	167	380	330.2	196.87	235	46	3	91	56	55	60	M30x3.5
3V-21	A15	530	167	380	330.2	285.78	330.2	46	3	91	56	55	60	M30x3.5
3V-24	A11	610	167	380	330.2	196.87	235	46	3	91	56	55	60	M30x3.5
3V-24	A15	610	167	380	330.2	285.78	330.2	46	3	91	56	55	60	M30x3.5
3V-32	A15	800	167	380	330.2	285.78	330.2	46	3	91	56	55	60	M30x3.5

Model		L	L1	M	N	P	Q max.	Q min.	R max.	R min.	S	T	U
3V-12	A8	3~M16	24	54	130	30	47.5	16	61	54.65	50	21	3~M8
3V-15	A8	6~M20	24	66	165	43	51.25	18.25	77.5	69.5	62	25.5	6~M16
3V-15	A11	6~M20	32	66	165	43	51.25	18.25	77.5	69.5	62	25.5	3~M10
3V-15	A15	6~M20	26	66	165	43	51.25	18.25	77.5	69.5	62	25.5	6~M24
3V-18	A8	6~M20	24	66	165	43	51.25	18.25	108	100	62	25.5	6~M16
3V-18	A11	6~M20	32	66	165	43	51.25	18.25	108	100	62	25.5	3~M10
3V-18	A15	6~M20	26	66	165	43	51.25	18.25	108	100	62	25.5	6~M24
3V-21	A11	6~M24	35	74	180	60	93.5	24.5	89	81	65	25	6~M20
3V-21	A15	6~M24	35	74	180	60	93.5	24.5	89	81	65	25	3~M12
3V-24	A11	6~M24	35	74	180	60	93.5	24.5	128	120	65	25	6~M20
3V-24	A15	6~M24	35	74	180	60	93.5	24.5	128	120	65	25	3~M12
3V-32	A15	6~M24	35	74	180	60	189.5	24.5	128	120	65	25	3~M12

3V-A

POWER CHUCK FOR VERTICAL LATHE(II)

3-JAW / Non-Thru-Hole

- WEDGE-HOOK type 3-jaw high speed power chuck.
- With manual radial setting of master jaws for the workpiece centering.
- Sealed against swarf, chips and coolant, suitable for vertical lathe.

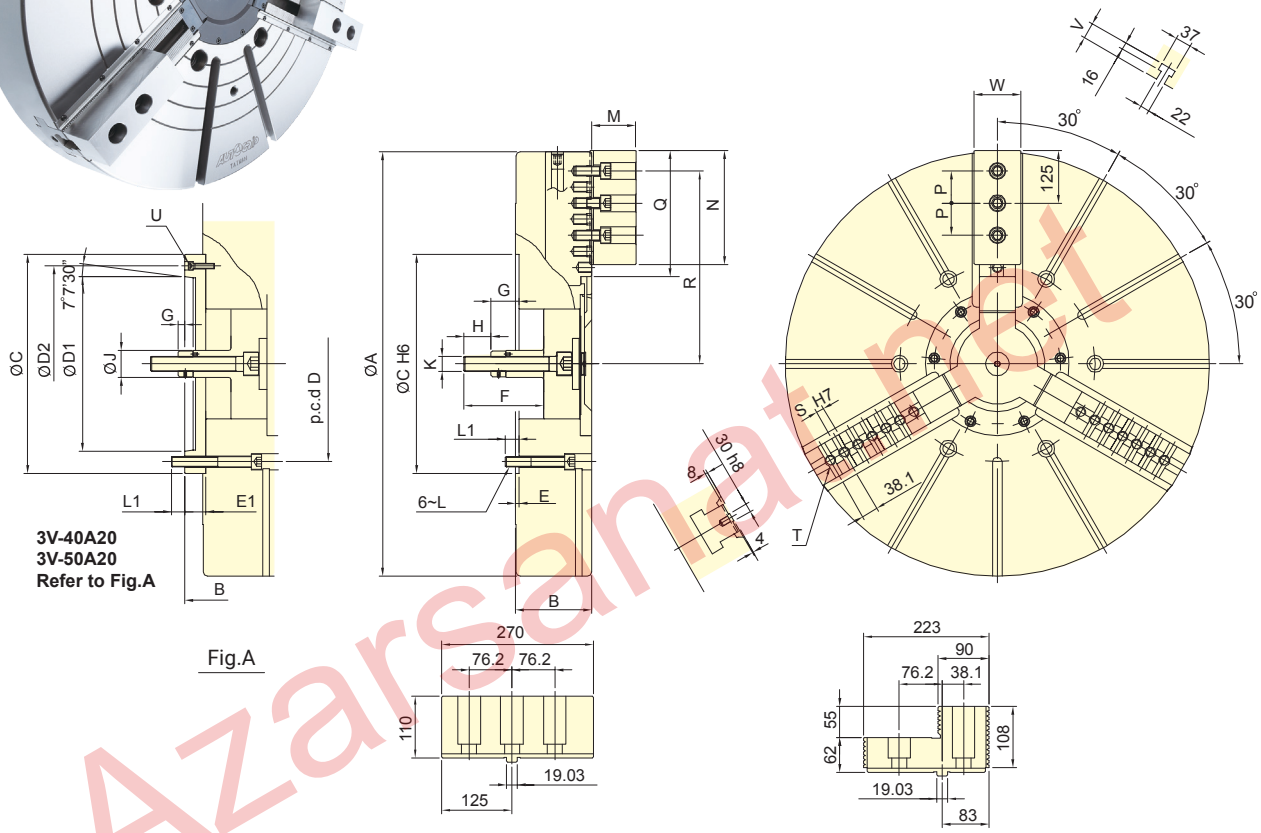

Subject to technical changes

SPECIFICATIONS

Model		Plunger stroke	Jaw stroke (Dia.)	Chucking Dia. Max.	Chucking Dia. Min.	Max. D.B. pull	Max. Clamping force	Max. speed	I Moment of inertia		Weight		Matching cyl.	Max. pressure
		mm	mm	mm	mm	kN (kgf)	kN (kgf)	min^{-1} (r.p.m.)	$kg·m^2$		kg			MPa (kgf/cm^2)
3V-40	A20	57	46+(60)	1005	380	180(18350)	320(32620)	630	68	72	780	849	RK-250 RE-250 RE-A250 RE-L250	4.24(43.2)
3V-50	A20	57	46+(60)	1250	600	180(18350)	320(32620)	500	145	148	1000	1050		4.24(43.2)
3V-63		60	48+(80)	1600	600	200(20390)	360(36700)	400	500	-	1600	-		4.76(46.7)
3V-79		60	48+(80)	2000	1000	200(20390)	360(36700)	320	1250	-	2500	-		4.76(46.7)

DIMENSIONS

Model		A	B		C	D	D1	D2	E	E1	F	G max.		G min.		H	J	K
3V-40	A20	1005	184	226	520	463.6	412.78	463.6	8	50	190	123	73	66	16	65	65	M36x4
3V-50	A20	1250	184	226	520	463.6	412.78	463.6	8	50	190	123	73	66	16	65	65	M36x4
3V-63		1600	222	-	720	647.6	-	-	8	-	218	131	-	71	-	65	65	M36x4
3V-79		2000	240	-	720	647.6	-	-	8	-	238	133	-	73	-	65	65	M36x4

Model		L	L1	M	N	P	Q	R max.	R min.	S	T	U	V	W
3V-40	A20	M24	37	110	270	76.2	295	457	404	6~19.03	7~M24	3~M12	42	84
3V-50	A20	M24	37	110	270	76.2	416	563	510	9~19.03	9~M24	3~M12	42	84
3V-63		M30	46	110	270	76.2	540	738	674	12~19.03	13~M24	-	42	110
3V-79		M30	48	110	270	76.2	740	914	850	16~19.03	17~M24	-	42	110

1. The dimensions and the specifications of 3V-A type are in red data.

POWER CHUCK FOR VERTICAL LATHE(I)

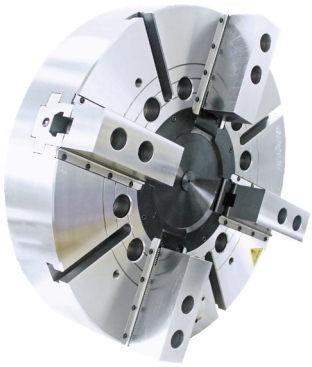

- WEDGE-HOOK type 4-jaw high speed power chuck.
- Sealed against swarf, chips and coolant, suitable for vertical lathe.

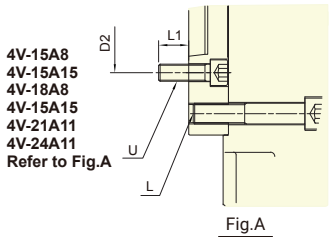

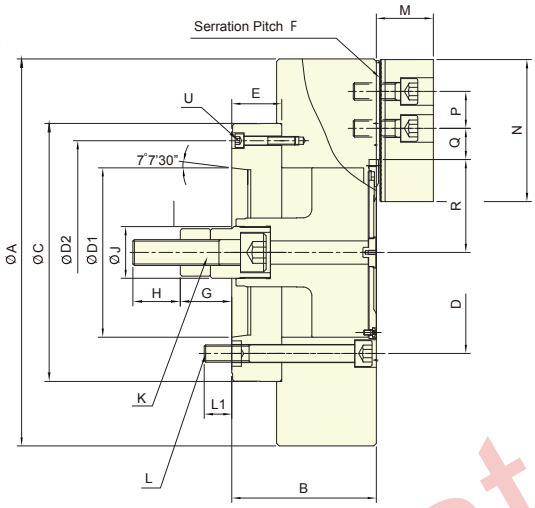

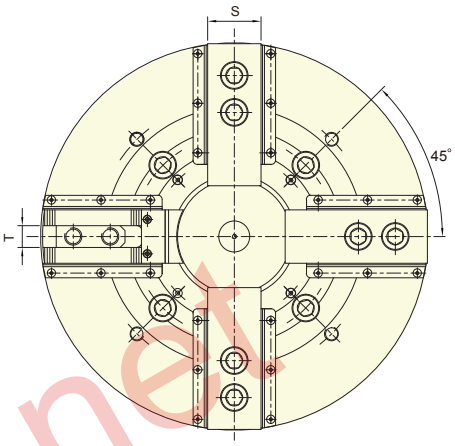

Subject to technical changes

SPECIFICATIONS

Model		Plunger stroke	Jaw stroke (Dia.)	Chucking Dia. Max.	Chucking Dia. Min.	Max. D.B. pull	Max. Clamping force	Max. speed	I Moment of inertia	Weight	Matching cyl.	Max. pressure
		mm	mm	mm	mm	kN (kgf)	kN (kgf)	min^{-1} (r.p.m.)	$kg{\cdot}m^2$	kg		MPa (kgf/cm^2)
4V-12	A8	30	12.7	304	48	41(4180)	156(15900)	2520	1.71	78.2	RK-150 RE-150	2.9(29)
4V-15	A8	35	16	381	36	81.9(8360)	245.1(25000)	2300	2.3	131	RK-200 RE-200K	3.2(32) 3.4(34)
4V-15	A11	35	16	381	36	81.9(8360)	245.1(25000)	2300	2.3	130		
4V-15	A15	35	16	381	36	81.9(8360)	245.1(25000)	2300	2.7	139		
4V-18	A8	35	16	450	60	81.9(8360)	245.1(25000)	2600	3.3	171.5		
4V-18	A11	35	16	450	60	81.9(8360)	245.1(25000)	2600	4.6	165		
4V-18	A15	35	16	450	60	81.9(8360)	245.1(25000)	2600	3.7	177.5		
4V-21	A11	35	16	530	62	81.9(8360)	271.6(27700)	1800	5.3	237		
4V-21	A15	35	16	530	62	81.9(8360)	271.6(27700)	1800	5.2	237.8		
4V-24	A11	35	16	610	152	81.9(8360)	271.6(27700)	1700	7.6	285.8		
4V-24	A15	35	16	610	152	81.9(8360)	271.6(27700)	1700	7.3	278.8		
4V-32	A15	35	16	800	152	81.9(8360)	271.6(27700)	880	36.7	480		

DIMENSIONS

Model		A	B	C	D	D1	D2	E	F	G max.	G min.	H	J	K
4V-12	A8	304	141	220	171.4	139.72	190	40	1.5	73	43	36	50	M20x2.5
4V-15	A8	381	164	300	235	139.72	171.4	54	1.5	99	64	55	60	M30x3.5
4V-15	A11	381	168	300	235	196.87	260	58	1.5	95	60	55	60	M30x3.5
4V-15	A15	381	172	380	235	285.78	330.2	62	1.5	91	56	55	60	M30x3.5
4V-18	A8	450	164	300	235	139.72	171.4	54	1.5	99	64	55	60	M30x3.5
4V-18	A11	450	168	300	235	196.87	260	58	1.5	95	60	55	60	M30x3.5
4V-18	A15	450	172	380	235	285.78	330.2	62	1.5	91	56	55	60	M30x3.5
4V-21	A11	530	167	380	330.2	196.87	235	46	3	91	56	55	60	M30x3.5
4V-21	A15	530	167	380	330.2	285.78	330.2	46	3	91	56	55	60	M30x3.5
4V-24	A11	610	167	380	330.2	196.87	235	46	3	91	56	55	60	M30x3.5
4V-24	A15	610	167	380	330.2	285.78	330.2	46	3	91	56	55	60	M30x3.5
4V-32	A15	800	187	380	330.2	285.78	330.2	46	3	91	56	55	60	M30x3.5

Model		L	L1	M	N	P	Q max.	Q min.	R max.	R min.	S	T	U
4V-12	A8	3~M16	24	42	110	30	51.75	15.75	61.3	54.9	40	16	3~M8
4V-15	A8	6~M20	24	66	165	43	43.75	15.25	87.5	79.4	62	25.5	6~M16
4V-15	A11	6~M20	32	66	165	43	43.75	15.25	87.5	79.4	62	25.5	3~M10
4V-15	A15	6~M20	26	66	165	43	43.75	15.25	87.5	79.4	62	25.5	6~M24
4V-18	A8	6~M20	24	66	165	43	51.22	18.22	108	100	62	25.5	6~M16
4V-18	A11	6~M20	32	66	165	43	51.22	18.22	108	100	62	25.5	3~M10
4V-18	A15	6~M20	26	66	165	43	51.22	18.22	108	100	62	25.5	6~M24
4V-21	A11	6~M24	35	74	180	60	72.5	24.5	89	81	65	25	6~M20
4V-21	A15	6~M24	35	74	180	60	72.5	24.5	89	81	65	25	3~M12
4V-24	A11	6~M24	35	74	180	60	93.5	24.5	128	120	65	25	6~M20
4V-24	A15	6~M24	35	74	180	60	93.5	24.5	128	120	65	25	3~M12
4V-32	A15	6~M24	35	74	180	60	189.5	24.5	128	120	65	25	3~M12

4V-A

POWER CHUCK FOR VERTICAL LATHE(II)

4-JAW / Non-Thru-Hole

- WEDGE-HOOK type 4-jaw high speed power chuck.
- With manual radial setting of master jaws for the workpiece centering.
- Sealed against swarf, chips and coolant, suitable for vertical lathe.

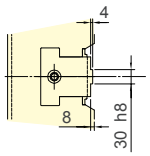

4V-40 A20
4V-50 A20
4V-63 A20
Refer to Fig.A

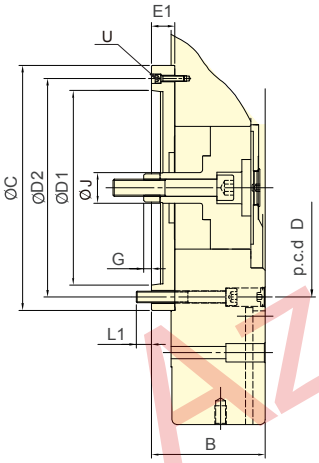

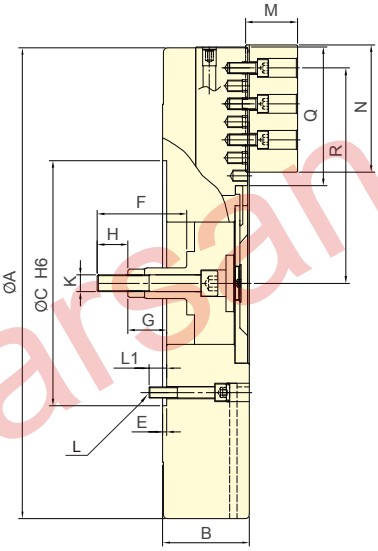

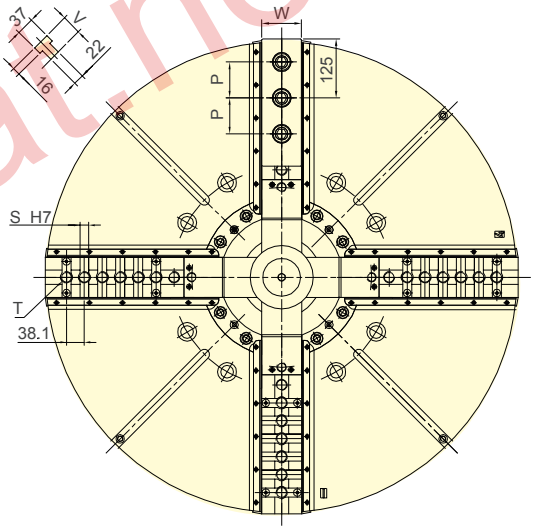

Fig.A

Subject to technical changes

SPECIFICATIONS

Model		Plunger stroke	Jaw stroke (Dia.)	Chucking Dia. Max.	Chucking Dia. Min.	Max. D.B. pull	Max. Clamping force	Max. speed	I Moment of inertia		Weight		Matching cyl.	Max. pressure
		mm	mm	mm	mm	kN (kgf)	kN (kgf)	min^{-1} (r.p.m.)	$kg{\cdot}m^2$		kg			MPa (kgf/cm^2)
4V-40	A20	57	46+(60)	1000	380	180(18350)	320(32620)	500	70	94	740	790	RK-250 RE-250 RE-A250 RE-L250	4.2(42)
4V-50	A20	57	46+(60)	1250	600	180(18350)	320(32620)	450	222	224	1130	1180		4.2(42)
4V-63	A20	60	48+(80)	1600	600	200(20390)	360(36700)	340	565		1800			4.6(46)

DIMENSIONS

Model		A	B		C	D	D1	D2	E	E1	F	G max.		G min.		H	J	K
4V-40	A20	1000	184	226	520	463.6	412.78	463.6	8	50	190	139	89	82	32	65	65	M36x4
4V-50	A20	1250	200	242	520	463.6	412.78	463.6	8	50	190	123	73	66	16	65	65	M36x4
4V-63	A20	1600	240		720	647.6	412.78	463.6	8	50	218	131		71		65	65	M36x4

Model		L	L1	M	N	P	Q	R max.	R min.	S	T	U	V	W
4V-40	A20	M24	37	110	270	76.2	295	457	404	6~19.03	7~M24	3~M12	42	84
4V-50	A20	M24	37	110	270	76.2	416	563	510	9~19.03	9~M24	3~M12	42	84
4V-63	A20	M30	46	110	270	76.2	540	738	674	12~19.03	13~M24	-	42	110

1. The dimensions and the specifications of 4V-A type are in red data.

- Rotary chuck with built-in pneumatic cylinder, compact design, suitable for light machining, compatible to standard soft jaw/hard jaw.
- Can be installed on a rotary table for indexing machining.
- Sealed against dust and cutting chips.
- Matching surfaces of all parts hardened, ground and lubricated directly.

■ Notice:To overcome friction force between distubritor ring and chuck body, the rotating torque of rotary table must be higher than the requirement shown in the table.

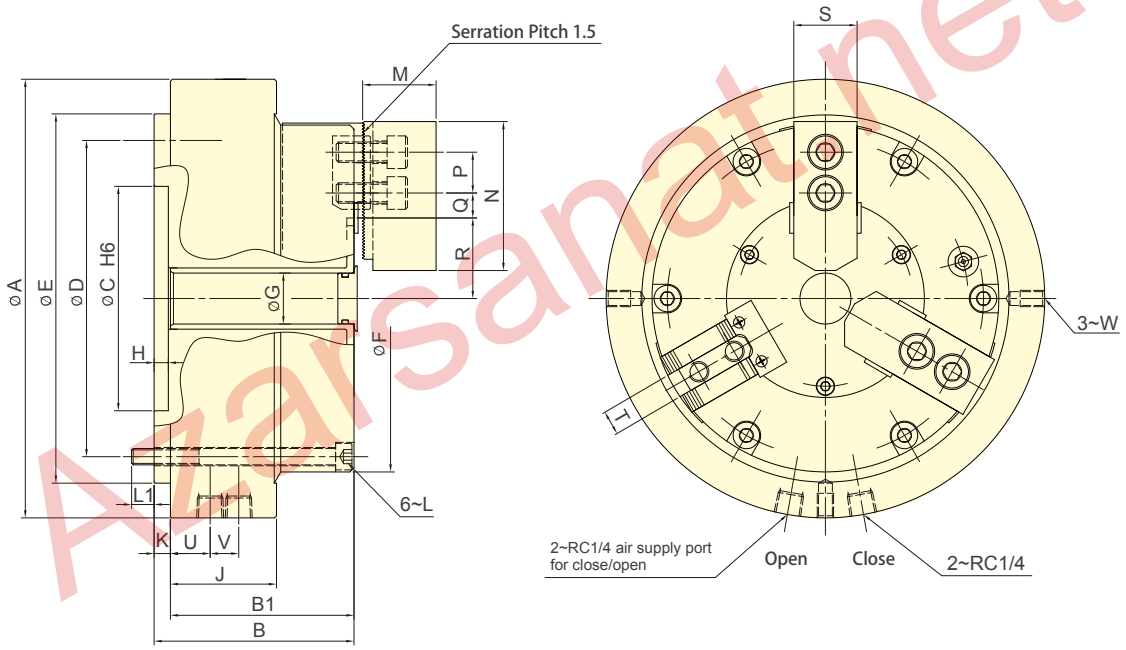

Subject to technical changes

SPECIFICATIONS

Model	Jaw stroke (Dia.)	Chucking Dia.		Max. clamping force Pneumatic (at 6.0kgf/cm²)	Max. pressure	Max. speed	Max Rotation reslstance torque	Air consumption (at 6.0 kgf/cm²)	Weight
		Max.	Min.						
	mm	mm	mm	kN (kgf)	MPa (kgf/cm²)	min⁻¹ (r.p.m.)	Nm	lit (kgf/cm²)	kg
RAP-306	5.5	170	25	21(2141.4)	7	72	40	3.1	16.2
RAP-308	6.8	215	37	34.2(3487.4)	7	60	60	3.1	30.6
RAP-310	7	254	53	48(4894.7)	7	53	85	4.2	42.4

DIMENSIONS

Model	A	B	B1	C (H6)	D	E	F	G	H	J	K
RAP-306	215	98	90	110	155	181	170	25	7	52	8
RAP-308	260	113	104	110	200	226	215	32	8	52	9
RAP-310	300	117	52	140	235	261	254	54	8	52	10

Model	L	L1	M	N	P	Q max.	Q min.	R max.	R min.	S	T	U	V	W
RAP-306	6~M8	11	36	73	20	10.75	4.75	39.5	36.75	31	12	19.5	14	3~M8
RAP-308	6~M8	16	37	95	25	13.25	8.75	57	53.6	35	14	19.5	14	3~M8
RAP-310	6~M8	14	42	110	30	23.25	12.75	64.5	61	40	16	19.5	14	3~M8

PULL LOCK POWER CHUCK

3-JAW / Non-Thru-Hole

- Radial clamp and axial pull down at the same time, keep the workpiece attaching close to the base surface of the chuck.
- Almost no workpiece uplifting displacement.
- The body and the cylinder pull-down mechanism are heat-treated and fine boring, which guarantee the clamping precision and durableness.

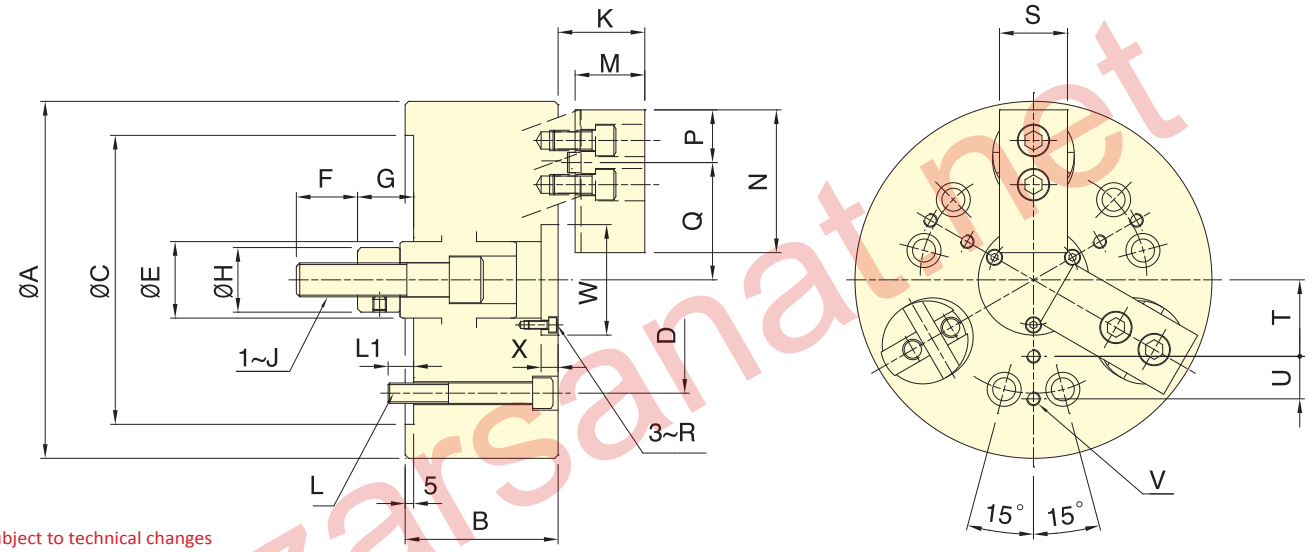

Subject to technical changes

SPECIFICATIONS

Model	Plunger stroke	Jaw stroke (Dia.)	Chucking Dia. Max.	Chucking Dia. Min.	Max. D.B. pull	Max. Clamping force	Max. speed	I Moment of inertia	Weight	Matching cyl.	Max. pressure
	mm	mm	mm	mm	kN (kgf)	kN (kgf)	min^{-1} (r.p.m.)	$kg{\cdot}m^2$	kg		MPa (kgf/cm^2)
3D-04	7	5	110	13	6.0(612)	10.5(1070)	3500	0.007	4.5	RK-75	1.6(16.5)
3D-05	7	5	135	21	10.0(1020)	17.0(1730)	3500	0.018	7.9	RK-75	2.7(27.5)
3D-06	10	7.2	165	22	15.0(1530)	25.0(2550)	3500	0.051	15	RK-100	2.1(21.4)
3D-08	10	7.2	210	28	25.0(2550)	45.0(4590)	3000	0.15	26	RK-125	2.2(22.5)
3D-10	15	10.8	254	35	35.0(3569)	60.0(6118)	2500	0.37	46	RK-125	3.1(31.6)
3D-12	15	10.8	304	50	45.0(4590)	75.0(7650)	2000	0.79	70	RK-150	2.8(28.5)
3D-15	20	14.5	381	60	53.9(5500)	90.0(9180)	1500	2.25	132	RK-150	3.4(34.2)

DIMENSIONS

Model	A	B	C	D	E	F	G max.	G min.	H	J	K max.	K min.	L
3D-04	110	60	85	70.6	25	20	22	15	25	M10	30	23	3~M10
3D-05	135	70	110	82.6	30	25	24	17	28	M12	35	28	3~M10
3D-06	165	85	140	104.8	35	36	37	27	32	M16	45	35	6~M10
3D-08	210	90	170	133.4	45	36	38	28	38	M20	56	46	6~M12
3D-10	254	110	220	171.5	55	46	47	32	50	M24	65	50	6~M16
3D-12	304	125	220	171.5	55	50	49.5	34.5	53	M27	70	55	6~M16
3D-15	381	140	300	235	70	55	61	41	55	M30	86	66	6~M20

Model	L1	M	N	P	Q max.	Q min.	R	S	T	U	V	W	X
3D-04	15	19.5	50	22	37	34.5	M3	25	22.5	-	3~M6	35	2
3D-05	16	24.5	56	23	46	43.5	M3	30	27.5	-	3~M6	44	2
3D-06	16	31	70	27	57.7	54.3	M4	35	35	20	6~M6	52	7
3D-08	15	41	84	31	70.8	67.2	M5	40	45	25	6~M8	65	10
3D-10	24	46	100	38	85	79.6	M6	50	55	30	6~M8	75	12
3D-12	22	51	120	42	101.9	96.5	M6	60	70	35	6~M10	90	12
3D-15	30	60	165	60	135.6	128.3	M8	70	95	45	6~M12	120	13

PULL LOCK POWER CHUCK

2-JAW / Non-Thru-Hole

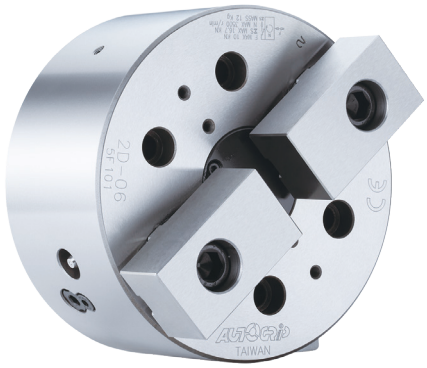

- Radial clamp and axial pull down at the same time, keep the workpiece attaching close to the base surface of the chuck.
- Almost no workpiece uplifting displacement.
- The body and the cylinder pull-down mechanism are heat-treated and fine boring, which guarantee the clamping precision and durableness.

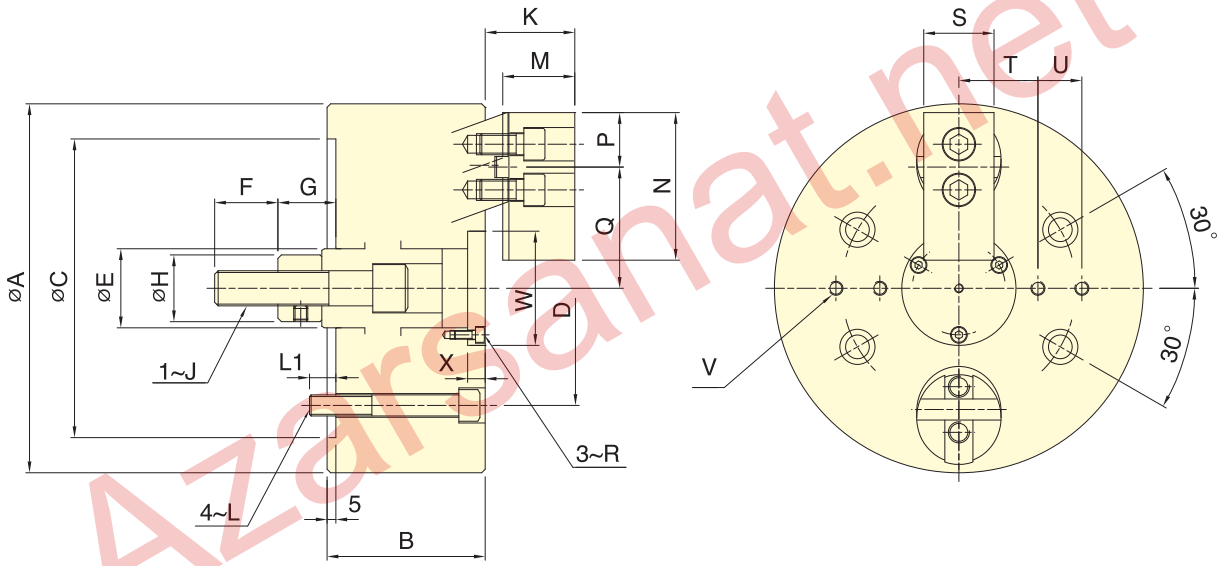

Subject to technical changes

SPECIFICATIONS

Model	Plunger stroke	Jaw stroke (Dia.)	Chucking Dia.		Max. D.B. pull	Max. Clamping force	Max. speed	I Moment of inertia	Weight	Matching cyl.	Max. pressure
			Max.	Min.							
	mm	mm	mm	mm	kN (kgf)	kN (kgf)	min^{-1} (r.p.m.)	$kg{\cdot}m^2$	kg		MPa (kgf/cm^2)
2D-06	10	7.2	165	22	10.0(1020)	16.7(1700)	3500	0.045	12	RK-100	1.4(14.3)
2D-08	10	7.2	210	28	16.7(1700)	30.0(3060)	3500	0.13	23	RK-125	1.5(15)
2D-10	15	10.8	254	35	23.3(2379)	40.0(4079)	2500	0.34	43	RK-125	2.1(21.1)

DIMENSIONS

Model	A	B	C	D	E	F	G max.	G min.	H	J	K max.	K min.	L
2D-06	165	85	140	104.8	35	36	37	27	32	M16	45	35	M10
2D-08	210	90	170	133.4	45	36	38	28	38	M20	56	46	M12
2D-10	254	110	220	171.5	55	46	47	32	50	M24	65	50	M16

Model	L1	M	N	P	Q max.	Q min.	R	S	T	U	V	W	X
2D-06	16	31	70	27	57.7	54.3	M4	35	35	20	4~M6	52	7
2D-08	15	41	84	31	70.8	67.2	M5	40	45	25	4~M8	65	10
2D-10	24	46	100	38	85	79.6	M6	50	55	30	4~M8	75	12

PULL LOCK POWER CHUCK

- Pin-Arbor Draw Down type 3-jaw thru-hole power chuck.
- High radial gripping force and high accuracy.
- Suitable for heavy machining.

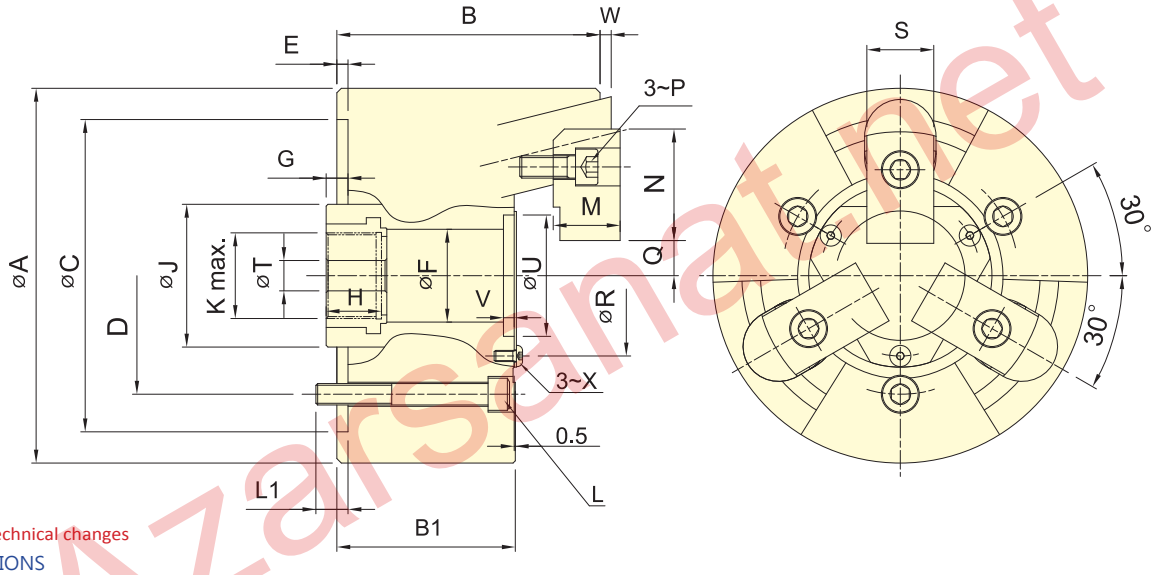

Subject to technical changes

SPECIFICATIONS

Model	Plunger stroke	Jaw stroke (Dia.)	Chucking Dia.		Max. D.B. pull	Max. Clamping force	Max. speed	I Moment of inertia	Weight	Matching cyl.	Max. pressure
			Max.	Min.							
	mm	mm	mm	mm	kN (kgf)	kN (kgf)	min^{-1} (r.p.m.)	$kg·m^2$	kg		MPa (kgf/cm^2)
3U-203	4	2	42	14	5.8(590)	16.7(1700)	10000	0.001	1.8	RK-75(N)	1.6(16)
3U-204	6	3	60	10	10.0(1020)	28.4(2900)	8000	0.005	3.9	RK-75(N)	2.7(27)
3U-205	6	3	84	15	13.9(1420)	39.7(4050)	8000	0.012	6.8	RK-100(N)	2.0(20)
3U-206	10	5	105	24	17.9(1830)	57.8(5900)	7000	0.055	14.7	RK-100(N)	2.6(26)
3U-208	12	6	132	25	25.0(2550)	80.0(8150)	6000	0.14	25.5	RK-125(N)	2.2(22)
3U-210	10	5	163	34	31.0(3160)	100.0(10100)	4500	0.36	43.5	RK-125(N)	3.1(31)
3U-212	10	5	210	81	35.0(3570)	100.0(10100)	3600	0.68	63.0	RK-125(N)	3.1(31)

DIMENSIONS

Model	A	B	B1	C(H6)	D	E	F	G max.	G min.	H	J	K	L	L1
3U-203	85	54.5	42	70	54	3.5	25	18	14	22	38	M20x1.5	3~M8	11
3U-204	110	72.5	55	85	70.6	4	30	16	10	24.5	42	M24x1.5	3~M10	12
3U-205	135	84.5	63	110	82.6	4	35	16	10	26	50	M28x1.5	3~M10	15
3U-206	168	118	80	140	104.8	5	45	20	10	31	60	M38x1.5	3~M10	16.5
3U-208	210	137	92	170	133.4	5	52	21	11	31	80	M48x2	3~M12	18
3U-210	254	152	102	220	171.4	5	75	25	15	37	105	M68x2	3~M16	23
3U-212	304	157	102	220	171.4	5	100	25	15	37	135	M92x2	3~M16	26

Model	M	N	P	Q max.	Q min.	R	S	T	U(H6)	V	W max.	W min.	X
3U-203	12	26	M5	7.5	6.5	38	15	10	32	3.5	2	-2	M3
3U-204	17	40	M6	10.75	9.25	46	20	10	38	4	3	-3	M4
3U-205	20	41.5	M8	13.25	11.75	55	24	10	45	5	3	-3	M5
3U-206	30	50	M10	15.75	13.25	72	30	17	58	6	5	-5	M5
3U-208	34	63	M12	16.25	13.25	82	35	17	68	6	5	-7	M6
3U-210	39	74	M14	20.75	18.25	107	40	17	93	6	5	-5	M8
3U-212	44	74	M14	44.25	41.75	130	40	17	114	6	5	-5	M10

PULL LOCK POWER CHUCK

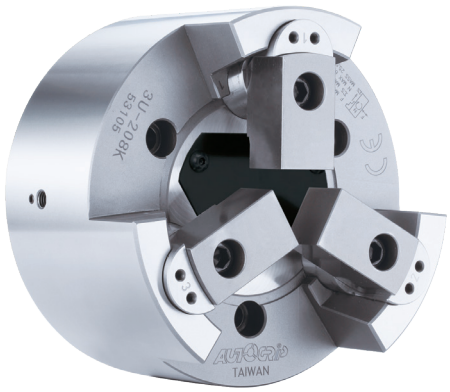

- Pin-Arbor Draw Down type 3-jaw non-thru-hole power chuck.
- High radial gripping force and high accuracy.
- Suitable for heavy machining.
- Can work with the airtight detection device to perform axial position confirm, suitable for the precision of large length size process.

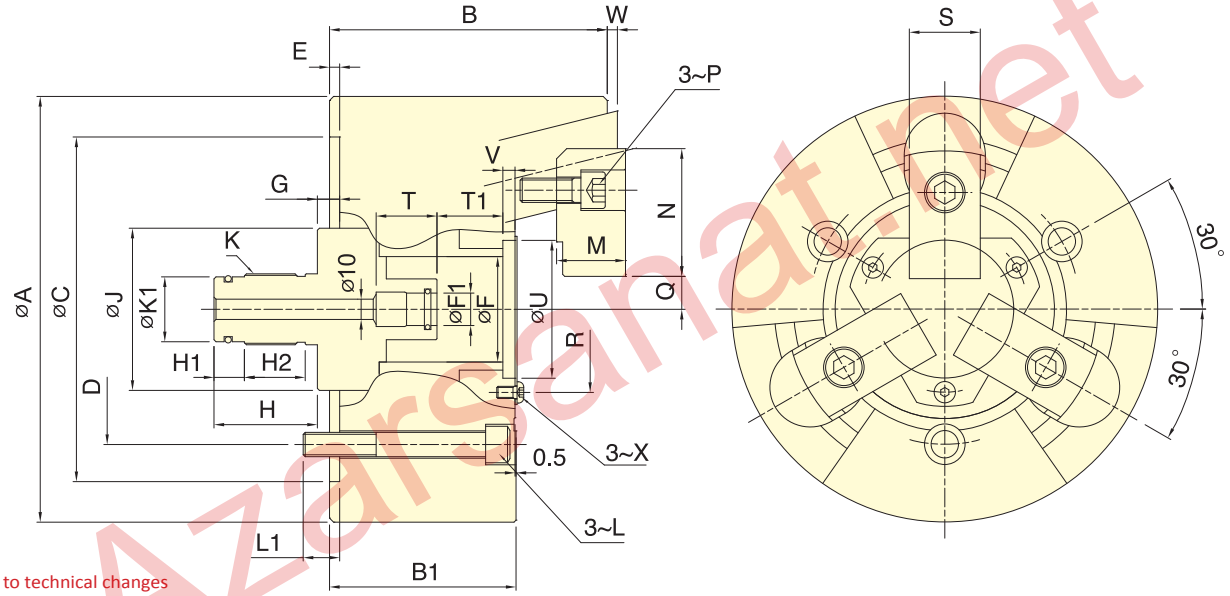

Subject to technical changes

SPECIFICATIONS

Model	Plunger stroke	Jaw stroke (Dia.)	Chucking Dia.		Max. D.B. pull	Max. Clamping force	Max. speed	I Moment of inertia	Weight	Matching cyl.	Max. pressure
			Max.	Min.							
	mm	mm	mm	mm	kN (kgf)	kN (kgf)	min^{-1} (r.p.m.)	$kg{\cdot}m^2$	kg		MPa (kgf/cm^2)
3U-205K	6	3	84	15	13.9(1420)	39.7(4050)	8000	0.018	6.8	RL-100,RL-A100N	2.0(20)
3U-206K	10	5	105	24	17.9(1830)	57.8(5900)	7000	0.055	14.9	RL-100,RL-A100N	2.5(25)
3U-208K	12	6	132	25	25.0(2550)	80.0(8150)	6000	0.14	25.8	RL-125, RL-A125N	2.2(22)
3U-210K	10	5	163	34	31.0(3160)	100(10100)	4500	0.36	44.0	RL-125, RL-A125N	3.1(31)
3U-212K	10	5	210	81	35.0(3570)	100(10100)	3600	0.68	63.8	RL-125, RL-A125N	3.1(31)

DIMENSIONS

Model	A	B	B1	C(H6)	D	E	F	F1(H8)	G max.	G min.	H	H1	H2	J	K	K1	L
3U-205K	135	84.5	63	110	82.6	4	35	14	16	10	42	12	-	50	M25x1.5	22	M10
3U-206K	168	118	80	140	104.8	5	45	14	20	10	48	12	30	60	M28x1.5	24	M10
3U-208K	210	137	92	170	133.4	5	52	16	21	11	51	15	30	80	M35x1.5	30	M12
3U-210K	254	152	102	220	171.4	5	75	16	25	15	51	15	30	105	M38x1.5	34	M16
3U-212K	304	157	102	220	171.4	5	100	16	25	15	51	15	30	135	M45x1.5	40	M16

Model	L1	M	N	P	Q max.	Q min.	R	S	T	T1	U(H6)	V	W max.	W min.	X
3U-205K	15	20	41.5	M8	13.25	11.75	55	24	25	15.5	45	5	3	-3	M5
3U-206K	16.5	30	50	M10	15.75	13.25	72	30	30	26.5	58	6	5	-5	M5
3U-208K	18	34	63	M12	16.25	13.25	82	35	30	32.5	68	6	5	-7	M6
3U-210K	23	39	74	M14	20.75	18.25	107	40	30	36.5	93	6	5	-5	M8
3U-212K	26	44	74	M14	44.25	41.75	130	40	30	36.5	114	6	5	-5	M10

EXPANSIBLE PULL LOCK POWER CHUCK

3-JAW / Non-Thru-Hole

- Suitable for internal gripping
- Radial clamp and axial pull down at the same time, keep the workpiece attaching close to the base surface of the chuck.
- Almost no workpiece uplifting displacement.
- With high precision and stability that chuck suitable for end process.

■ Airtight pressure detect function is optional.

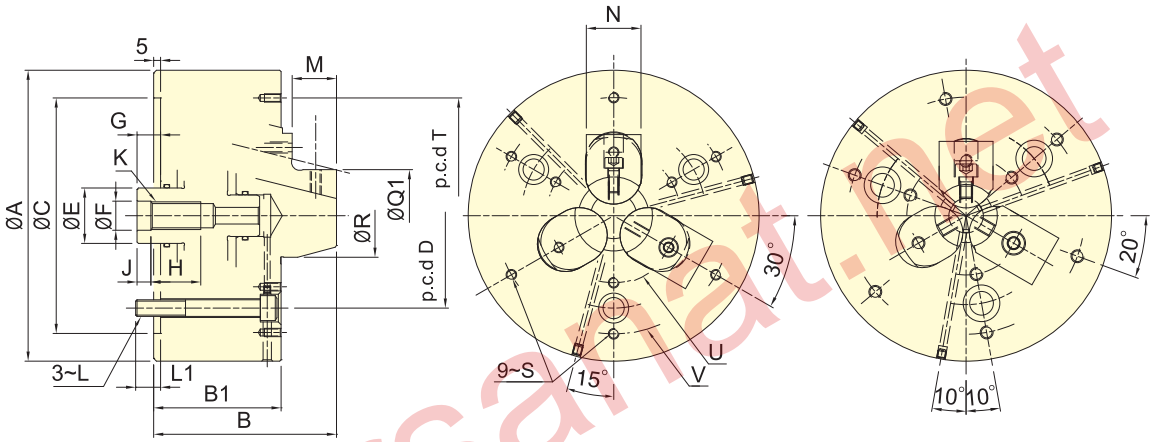

3E-06、08、10

3E-05

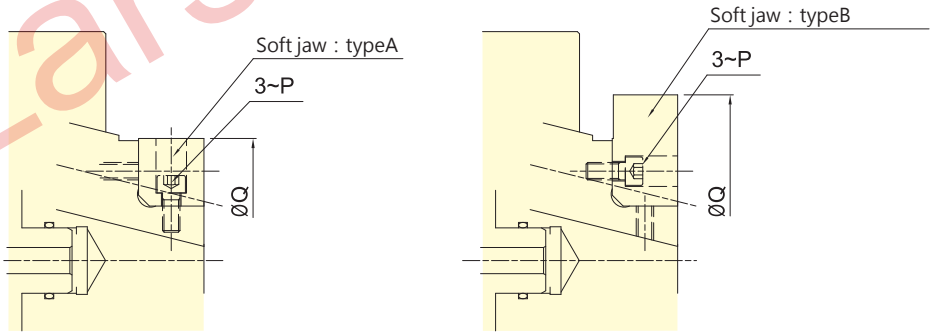

Subject to technical changes

SPECIFICATIONS

Model	Plunger stroke	Jaw stroke (Dia.)	Chucking Dia.		Max. D.B. pull	Max. Clamping force	Max. speed	I Moment of inertia	Weight	Matching cyl.	Max. pressure
			Max.	Min.							
	mm	mm	mm	mm	kN (kgf)	kN (kgf)	min^{-1} (r.p.m.)	$kg·m^2$	kg		MPa (kgf/cm^2)
3E-05	6	3	83	29	13.0(1325)	42.0(4280)	7000	0.018	7.5	RK-100	1.8(18.5)
3E-06	10	5	110	44	18.0(1835)	58.0(5910)	6000	0.042	13.6	RK-100	2.5(25.6)
3E-08	10	5	150	50	25.0(2530)	80.0(8150)	5000	0.14	26.5	RK-125	2.2(22.5)
3E-10	10	5	190	60	35.0(3570)	100.0(10200)	3600	0.31	39.5	RK-150	2.8(28.5)

DIMENSIONS

Model	A	B	B1	C (H6)	D	E	F (H8)	G max.	G min.	H	J	K	L	L1
3E-05	135	98	72	110	82.6	25	18	18	12	25	8	M16	M10	15
3E-06	165	112	80	140	104.8	35	18	22	12	30	8	M16	M10	16
3E-08	210	135	90	170	133.4	40	21	22	12	36	10	M20	M12	18
3E-10	254	152	102	220	171.4	50	25	25	15	48	10	M24	M16	23

Model	M	N	P	type A		type B		Q1		R	S	T	U (p.c.d)	V (p.c.d)
				Q max.	Q min.	Q max.	Q min.	max.	min.					
3E-05	20	25	M6	68	50	83	67	50	29	25	M6x12	110	55	110
3E-06	23	31	M6	90	70	110	89	70	44	40	M6x12	130	76	134
3E-08	30	35	M8	110	90	150	108	90	50	49	M6x12	170	100	170
3E-10	35	40	M10	127	110	190	125	110	60	59	M8x16	210	120	210

INCLINED MASTER JAWS POWER CHUCK

3-JAW / Non-Thru-Hole

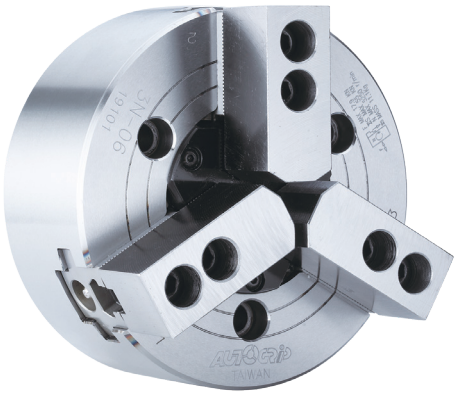

- The surface of the center through cover is grinding treated, it can be the position base surface of the jig/workpiece.
- The slideway of main jaws is inclined. It improves the clamping force and reduces the upfloat situation of the workpiece.
- Work with standard top jaws.

- Airtight pressure detect function is optional.
- External gripping only.

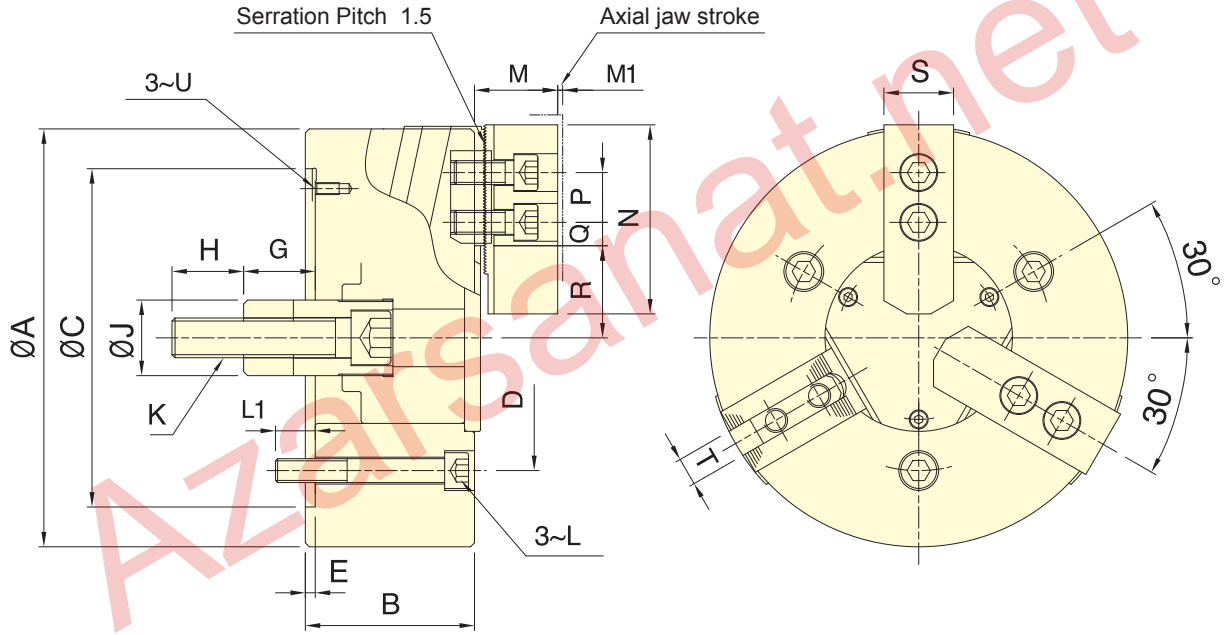

Subject to technical changes

SPECIFICATIONS

Model	Plunger stroke	Jaw stroke (Dia.)	Chucking Dia.		Max. D.B. pull	Max. Clamping force	Max. speed	I Moment of inertia	Weight	Matching cyl.	Max. pressure
			Max.	Min.							
	mm	mm	mm	mm	kN (kgf)	kN (kgf)	min⁻¹ (r.p.m.)	kg·m²	kg		MPa (kgf/cm²)
3N-06	20	8.1(Axial0.9)	165	14	18(1835)	61.5(6270)	5000	0.05	11.1	RK-100(N)	2.6(26)
3N-08	23	9.4(Axial1.0)	210	17	25(2540)	85.8(8750)	4500	0.14	24.5	RK-125(N)	2.2(22)
3N-10	25	10.2(Axial1.1)	254	22	29(2950)	108(11000)	4000	0.32	34.5	RK-150(N)	1.8(18)

DIMENSIONS

Model	A	B	C(H6)	D	E	G max.	G min.	H	J	K	L
3N-06	165	72	140	104.8	5	54.5	34.5	36	34	M16x2	M10
3N-08	210	85	170	133.4	5	59	36	36	38	M20x2.5	M12
3N-10	254	89	220	171.4	5	63	38	36	45	M20x2.5	M16

Model	L1	M	M1	N	P	Q max.	Q min.	R max.	R min.	S	T	U
3N-06	16	41	0.9	73	20	15.25	7.75	38.3	34.25	31	12	M6
3N-08	20	42	1.0	95	25	22.25	11.75	46.3	41.6	35	14	M6
3N-10	24	47	1.1	110	30	33.75	11.25	52.1	47	40	16	M8

FINGER POWER CHUCK

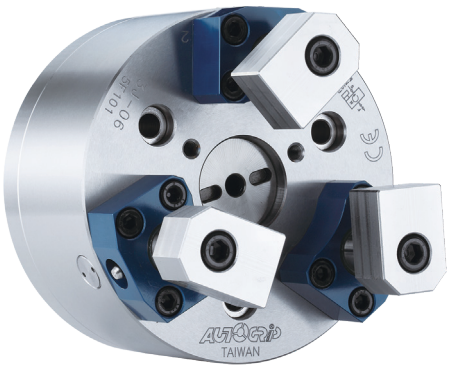

- Gripping at the end face and preventing deformation of workpiece.
- Suitable for thin wall workpiece processing.
- The gripping compensating mechanism can grasp the irregular surface workpieces well.

■ Airtight pressure detect function is optional.

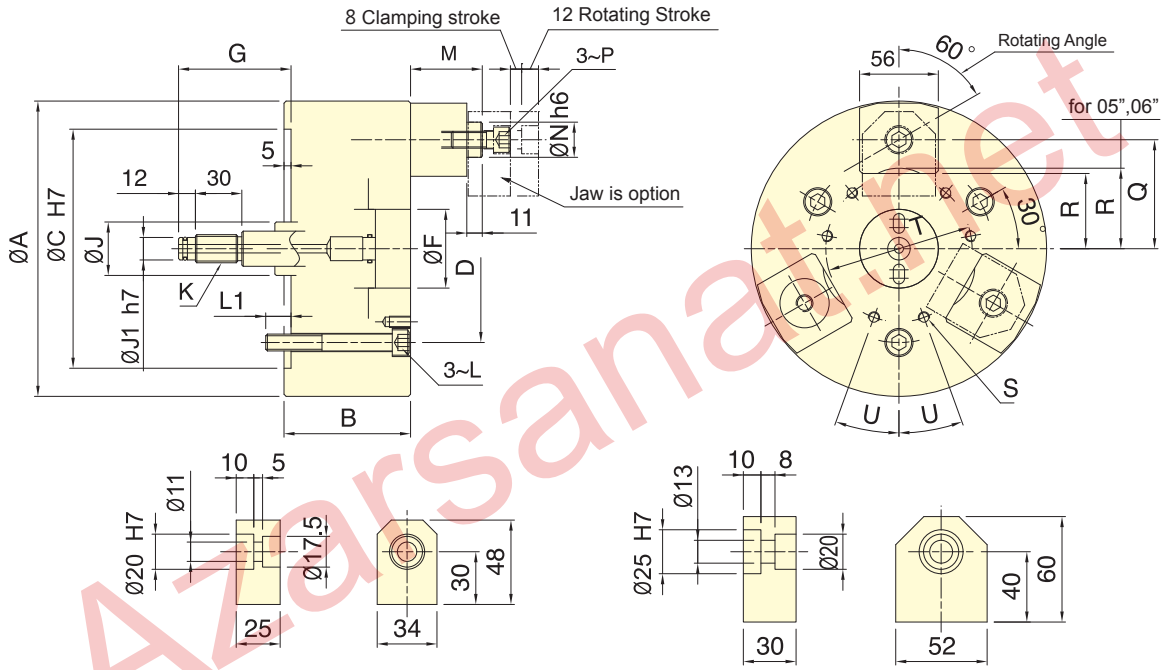

Subject to technical changes

SPECIFICATIONS

for 05",06" / for 08",10",12"

Model	Rotating stroke	Claming stroke	Jaw's compensation	Chucking Dia.		Max. D.B. pull	Max. Clamping force	Max. speed	I Moment of inertia	Weight	Matching cyl.	Max. pressure
				Max.	Min.							
	mm	mm	mm	mm	mm	kN (kgf)	kN (kgf)	min^{-1} (r.p.m.)	$kg{\cdot}m^2$	kg		MPa (kgf/cm^2)
3J-05	12	8	2	53	25	7.5(765)	6.0(612)	4000	0.02	11.0	RK-100 OR RK-100(N)	1.0(10)
3J-06	12	8	2	79	55	9.0(918)	7.5(765)	4000	0.04	12.0	RK-100 OR RK-100(N)	1.2(12)
3J-08	12	8	2	106	75	18.0(1835)	16.5(1680)	3500	0.13	23.0	RK-100 OR RK-100(N)	2.5(25)
3J-10	12	8	2.5	150	119	18.0(1835)	16.5(1680)	3500	0.30	33.0	RK-100 OR RK-100(N)	2.5(25)
3J-12	12	8	2.5	200	169	18.0(1835)	16.5(1680)	3000	0.56	44.0	RK-100 OR RK-100(N)	2.5(25)

DIMENSIONS

Model	A	B	C	D	F	G max.	G min.	J	J1	K
3J-05	135	86	110	82.6	40	75	55	25	9	M12x1.75
3J-06	165	86	140	104.8	45	75	55	28	12	M16x2
3J-08	210	90	170	133.4	56	80	60	38	16	M20x2.5
3J-10	254	95	220	171.4	56	75	55	38	16	M20x2.5
3J-12	304	95	220	171.4	56	75	55	38	16	M20x2.5

Model	L	L1	M max.	M min.	N	P	Q	R	S	T	U
3J-05	M10	15	56	36	20	M10	42.5	27	3~M6	50	-
3J-06	M10	15	56	36	20	M10	57.5	40	3~M8	64	-
3J-08	M12	18	71	51	25	M12	77.5	53.5	6~M8	104	20°
3J-10	M16	24	71	51	25	M12	99.5	75.5	6~M8	140	20°
3J-12	M16	24	71	51	25	M12	124.5	100.5	6~M8	190	20°

FINGER POWER CHUCK

- Gripping at the end face and preventing deformation of workpiece.
- Suitable for thin wall workpiece processing.
- The gripping compensating mechanism can grasp the irregular surface workpieces well.

■ Airtight pressure detect function is optional.

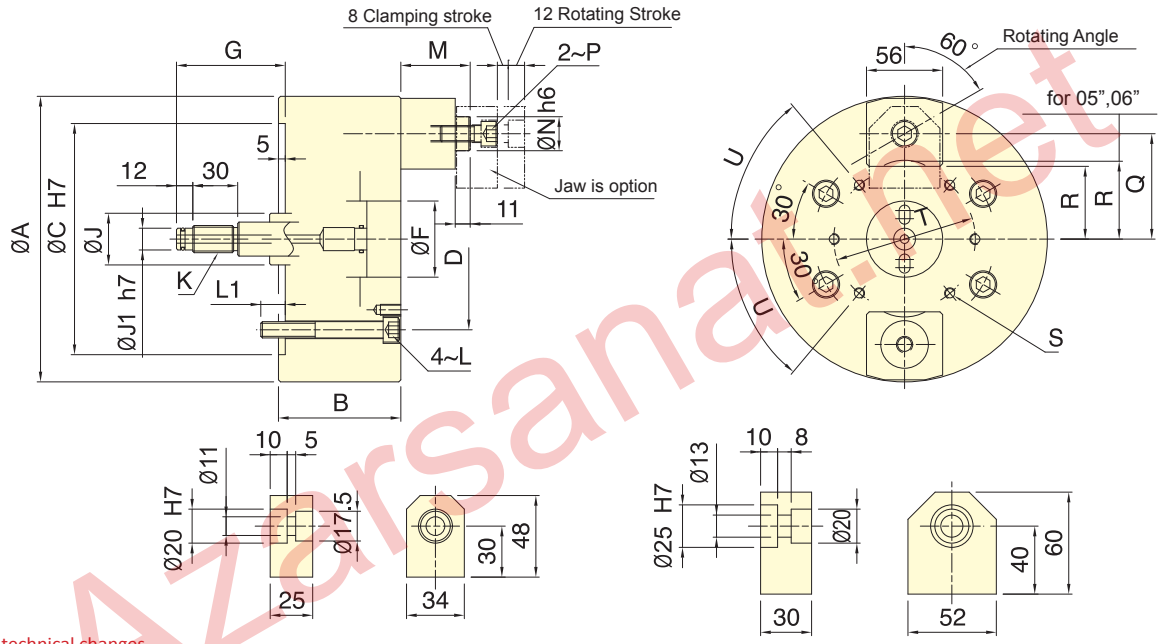

Subject to technical changes

SPECIFICATIONS

Model	Rotating stroke	Claming stroke	Jaw's compensation	Chucking Dia.		Max. D.B. pull	Max. Clamping force	Max. speed	I Moment of inertia	Weight	Matching cyl.	Max. pressure
				Max.	Min.							
	mm	mm	mm	mm	mm	kN (kgf)	kN (kgf)	min^{-1} (r.p.m.)	$kg{\cdot}m^2$	kg		MPa (kgf/cm^2)
2J-05	12	8	2	53	25	5.0(510)	4.0(408)	4000	0.015	9.0	RK-100 OR RK-100(N)	0.7(7)
2J-06	12	8	2	79	55	6.0(612)	5.0(510)	4000	0.035	9.8	RK-100 OR RK-100(N)	0.8(8)
2J-08	12	8	2	106	75	12.0(1224)	11.0(1122)	3500	0.12	20.3	RK-100 OR RK-100(N)	1.7(17)
2J-10	12	8	2.5	150	119	12.0(1224)	11.0(1122)	3500	0.28	30.7	RK-100 OR RK-100(N)	1.7(17)
2J-12	12	8	2.5	200	169	12.0(1224)	11.0(1122)	3000	0.52	41.2	RK-100 OR RK-100(N)	1.7(17)

DIMENSIONS

Model	A	B	C	D	F	G max.	G min.	J	J1	K
2J-05	135	86	110	82.6	40	75	55	25	9	M12x1.75
2J-06	165	86	140	104.8	45	75	55	28	12	M16x2
2J-08	210	90	170	133.4	56	80	60	38	16	M20x2.5
2J-10	254	95	220	171.4	56	75	55	38	16	M20x2.5
2J-12	304	95	220	171.4	56	75	55	38	16	M20x2.5

Model	L	L1	M max.	M min.	N	P	Q	R	S	T	U
2J-05	M10	15	56	36	20	M10	42.5	27	4~M6	50	30°
2J-06	M10	15	56	36	20	M10	57.5	40	4~M8	64	30°
2J-08	M12	18	71	51	25	M12	77.5	53.5	6~M8	104	50°
2J-10	M16	24	71	51	25	M12	99.5	75.5	6~M8	140	50°
2J-12	M16	24	71	51	25	M12	124.5	100.5	6~M8	190	50°

- The workpieces compensation of eccentric is 2 mm, fixed position for the center thimble, swing and grasp the workpiece to three jaw.
- Suitable for such materials as the casting and forging to process.
- Special seal proof for dust and cutting fluid, it is more convenient when maintenance.
- Swing parts are to heat treatment hardened and ground for steel, in order to improve products service life.

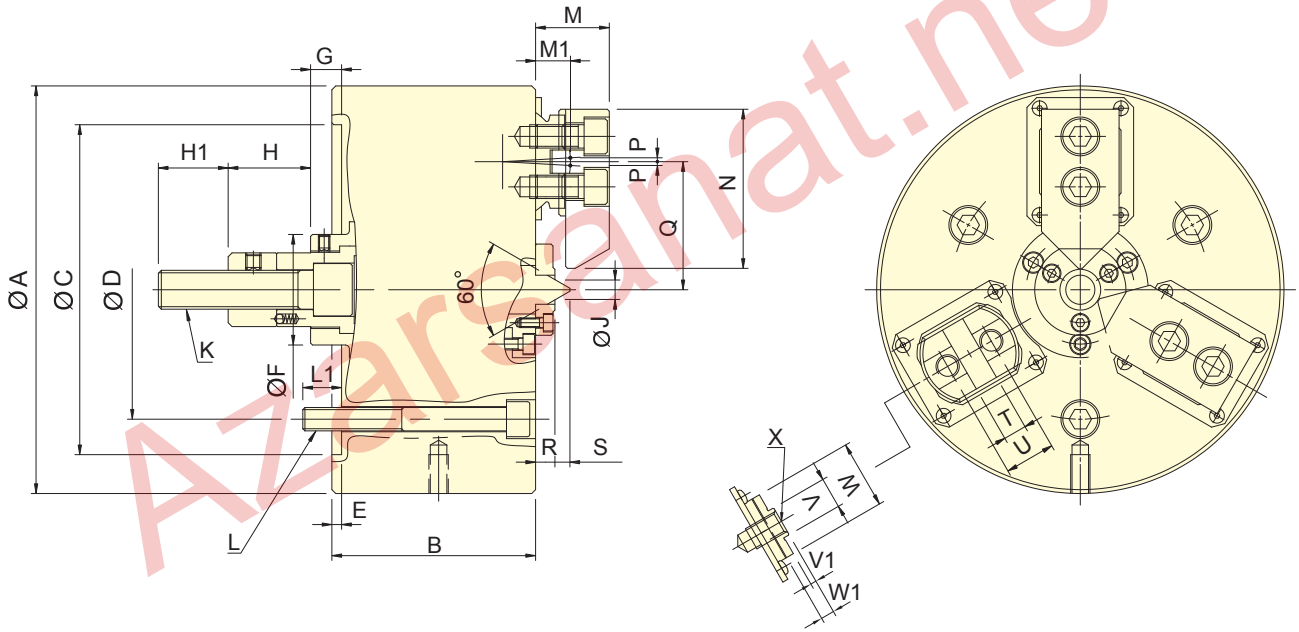

Subject to technical changes

SPECIFICATIONS

Model	Plunger stroke	Jaw stroke (Dia.)	Chucking Dia.		Max. D.B. pull	Max. clamping force	Max. speed	I Moment of inertia	Weight	Matching cyl.	Compensation
			Max.	Min.							
	mm	mm	mm	mm	kN (kgf)	kN (kgf)	min^{-1} (r.p.m.)	$kg{\cdot}m^2$	kg		mm
3R-08	20	8	65	18	19.6(2000)	53.0(5404)	2800	0.15	27	RK-100N	2
3R-10	25	10	90	22	29.4(3000)	67.7(6901)	2500	0.38	45	RK-125N	2

DIMENSIONS

Model	A	B	C (H6)	D	E	F	G max.	G min.	H	H1	J	K	L	L1
3R-08	210	105	170	133.4	5	57	26	6	42.5	36	10.4	M20x2.5	3~M12	20
3R-10	254	115	220	171.4	5.5	64	36.5	11.5	25	39	15	M20x2.5	3~M16	22.5

Model	M	M1	N	P	Q max.	Q min.	R	S	T (H7)	U	V	V1	W	W1	X
3R-08	38	18	82	2	68	64	10	7.7	12	26	16	3	35	7	M12
3R-10	40	19	102	2.6	82	78	10	11.3	15	32	18	3	40	7	M14

3W/3W-C SWING TYPE 3-JAW POWER CHUCK

TAIWAN EXCELLENCE 2020

- Swing and grasp the workpiece to three jaw.
  (3W is automatically positioned to the center type .)
- Suitable for such materials as the casting and forging to process.
- Seal proof for dust and cutting fluid, it is more convenient when maintenance.
- Swing parts are to heat treatment hardened and ground for steel, in order to improve products service life.
- Swing and grasp the workpiece to three jaw.
  (3W-C is center compensation type .)
- The workpieces compensation of eccentric is 2 mm, fixed position for the center thimble.

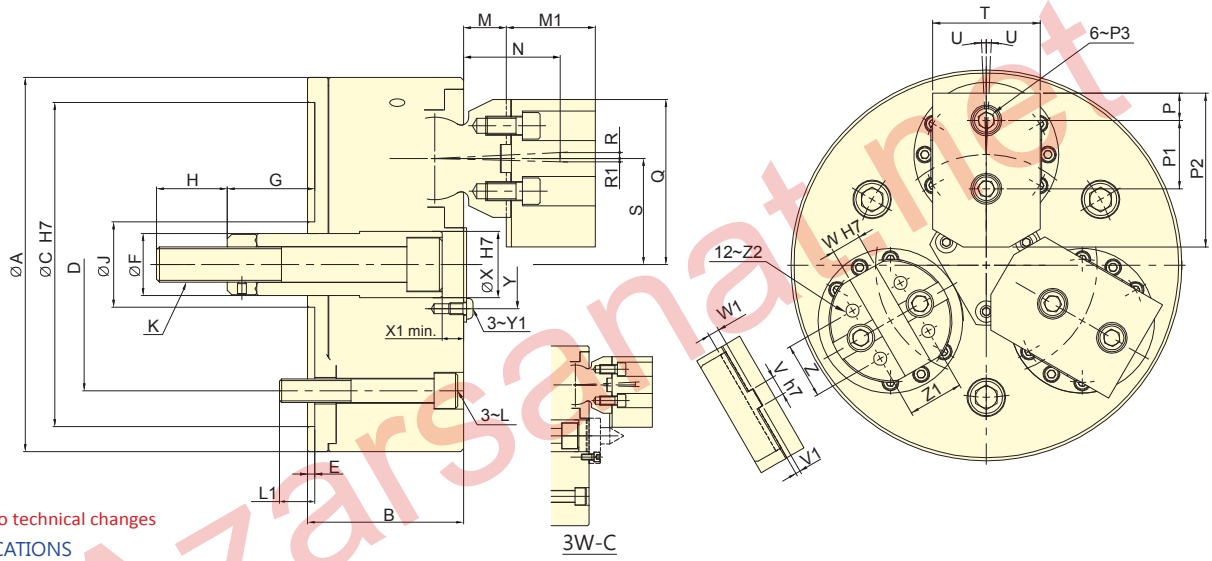

Subject to technical changes

SPECIFICATIONS

Model	Plunger stroke	Jaw stroke (Dia.)	Chucking Dia. OD	Chucking Dia. ID	Max. D.B. pull	Max. clamping force	Max. speed	I Moment of inertia	Weight	Matching cyl.	Compensation
			Min. ~ Max.	Min. ~ Max.							
	mm	mm	mm	mm	kN (kgf)	kN (kgf)	min^{-1} (r.p.m.)	$kg·m^2$	kg		mm
3W-08	14.4	9.8	16~150	76~203	25(2550)	85.0(8670)	4300	0.12	23	RK-100(N)	-
3W-C08	14.4	9.8	16~150	76~203	25(2550)	85.0(8670)	4300	0.12	23	RK-100(N)	2
3W-10	17.5	12.5	50~205	85~235	35.3(3600)	105.9(10800)	2500	0.37	48.6	RK-125(N)	-
3W-C10	17.5	12.5	50~205	85~235	35.3(3600)	105.9(10800)	2500	0.37	48.6	RK-125(N)	2
3W-12	17.5	12.5	63~240	127~305	35.3(3600)	105.9(10800)	2400	0.73	65	RK-125(N)	-
3W-C12	17.5	12.5	63~240	127~305	35.3(3600)	105.9(10800)	2400	0.73	65	RK-125(N)	2
3W-15	22.5	15.9	176~317	165~381	56(5600)	168.2(16800)	2200	1.81	97	RK-150(N)	-
3W-C15	22.5	15.9	176~317	165~381	56(5600)	168.2(16800)	2200	1.81	97	RK-150(N)	3

DIMENSIONS

Model	A	B	C (H7)	D	E	F	G max.	G min.	H	J	K	L	L1	M	M1	N	P	P1	P2
3W-08	210	89	170	133.4	5	34	51.9	37.5	40	50	M18x2.5	M12	19	19.3	56.5	52.7	16	38	80
3W-C08	210	89	170	133.4	5	34	51.9	37.5	40	50	M18x2.5	M12	19	19.3	56.5	52.7	16	38	80
3W-10	254	106	220	171.4	5	42	67.5	50	48	58	M24x3	M16	24	29	60.5	65.6	17.8	44.4	100
3W-C10	254	106	220	171.4	5	42	67.5	50	48	58	M24x3	M16	24	29	60.5	65.6	17.8	44.4	100
3W-12	304	106	220	171.4	5	42	67.5	50	48	58	M24x3	M16	24	29	60.5	65.6	17.8	44.4	100
3W-C12	304	106	220	171.4	5	42	67.5	50	48	58	M24x3	M16	24	29	60.5	65.6	17.8	44.4	100
3W-15	381	120	300	235	5	55	62.5	40	46	80	M27x3	M20	30	32.4	72	74.3	19.25	63.5	140
3W-C15	381	120	300	235	5	55	62.5	40	46	80	M27x3	M20	30	32.4	72	74.3	19.25	63.5	140

Model	P3	Q	R	R1	S	T	U	V (h7)	V1	W (H7)	W1	X(H7)	X1	Y	Y1	Z	Z1	Z2
3W-08	M12	95	2.69	2.24	60	57	2	7.94	3	12.68	7	34	3.5	46	M6	32	32	M10
3W-C08	M12	95	2.69	2.24	60	57	2	7.94	3	12.68	7	34	3.5	46	M6	32	32	M10
3W-10	M12	112	4.03	2.26	72	70	2.5	12.7	3	19.03	7	45	5	60	M8	36	36	M10
3W-C10	M12	112	4.03	2.26	72	70	2.5	12.7	3	19.03	7	45	5	60	M8	36	36	M10
3W-12	M12	132.5	4.03	2.26	92.5	70	2.5	12.7	3	19.03	7	45	5	60	M8	36	36	M10
3W-C12	M12	132.5	4.03	2.26	92.5	70	2.5	12.7	3	19.03	7	45	5	60	M8	36	36	M10
3W-15	M12	172	5.14	2.83	121	80	2	12.7	3	19.03	7	56	3	90	M8	36	36	M10
3W-C15	M12	172	5.14	2.83	121	80	2	12.7	3	19.03	7	56	3	90	M8	36	36	M10

QUICK JAW-CHANGE CHUCK

- The shortest changes time for soft jaw, it is the high repeatability precision.
- Chuck of all parts hardened, ground and lubricated directly.
- High rigidity and high clamping accuracy.
- For safety system that master jaw will complete return when base jaw and serration match up properly.

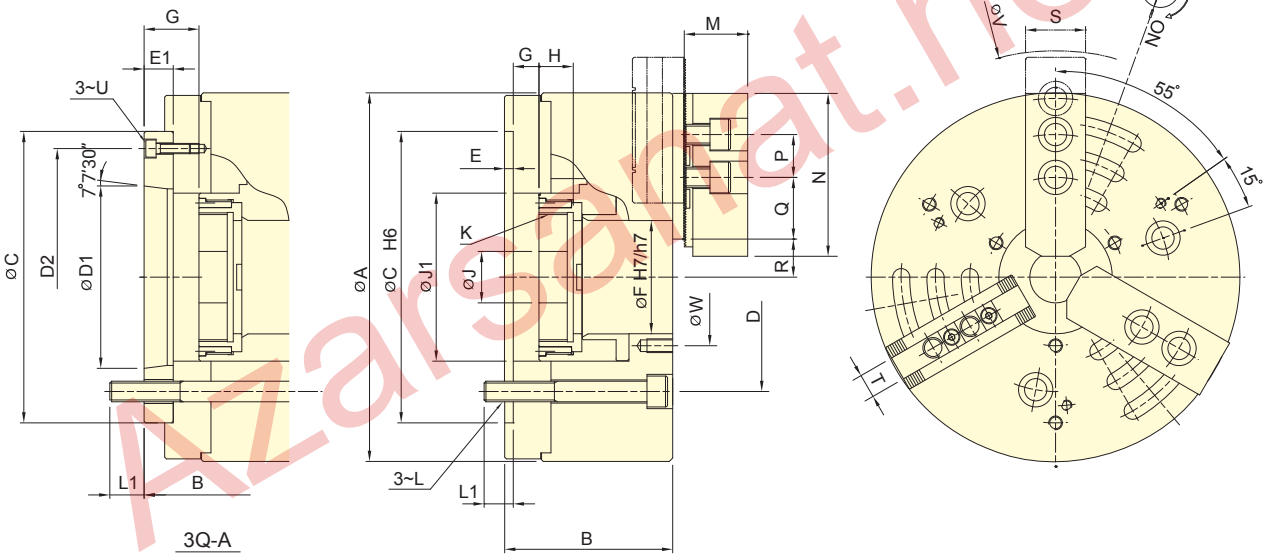

Subject to technical changes

SPECIFICATIONS

Model		Plunger stroke	Jaw stroke (Dia.)	Chucking Dia. Max.	Chucking Dia. Min.	Max. D.B. pull	Max. Clamping force	Max. speed	I Moment of inertia	Weight		Matching cyl.	Max. pressure
		mm	mm	mm	mm	kN (kgf)	kN (kgf)	min^{-1} (r.p.m.)	$kg·m^2$	kg			MPa (kgf/cm^2)
3Q-08	A6	16	7.5	210	23	45.0(4590)	82.0(8360)	5000	0.15	24.5	26.0	TK-1068	3.1(31)
3Q-10	A8	19	8.8	254	41	60.0(6118)	115.0(11270)	4500	0.41	44.0	46.0	TK-A1287	2.8(28)
3Q-12	A8	23	10.6	315	47	81.0(8259)	165.0(16825)	3500	0.96	73.0	75.0	TK-A1511	2.4(25)

DIMENSIONS

Model		A	B		C	D	D1	D2	E	E1	F	G max.		G min.		H	J
3Q-08	A6	215	98	110	170	133.4	106.38	150	5	17	66	14.5	32	-1.5	15.5	20	30
3Q-10	A8	254	119	132	220	171.4	139.72	190	5	18	81	8.5	26.5	-10.5	7.5	39	45
3Q-12	A8	315	133	145	220	171.4	139.72	190	6	18	106	8.5	26.5	-14.5	3.5	42	50

Model		J1	K max.	L	L1		M	N	P	Q	R max.	R min.	S	T	U	V	W
3Q-08	A6	98	M75x2	M12	17	20	37	95	25	36	20.8~44.8	17.1~41.1	35	14	M6	264	80
3Q-10	A8	115	M90x2	M16	23	25	42	110	30	40.5	21.1~52.8	16.7~48.2	40	16	M8	312	100
3Q-12	A8	140	M115x2	M16	22	24	50	111	30	57	34.1~70.1	28.8~64.8	50	21	M8	360	130

1. The dimensions and the specifications of 3Q-A type are in red data.

FOUR-JAW TWO MOTION TYPE POWER CHUCK

4-JAW / Non-Thru-Hole

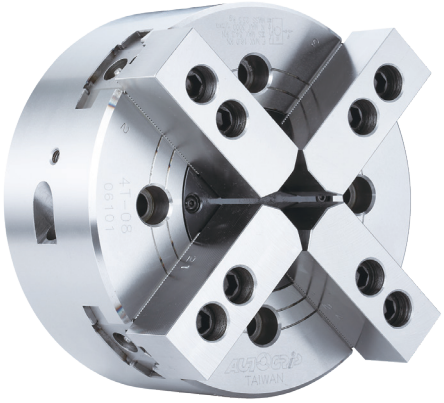

- CRANK type with two pairs of 2 jaws self center independent of each other.
- The 4T series is suitable for square bar and other nonuniform shaped workpieces.

- Patent numbers :
  Taiwan : PAT.NO.M359385
  China : PAT.NO.ZL2009.2.0009309.1

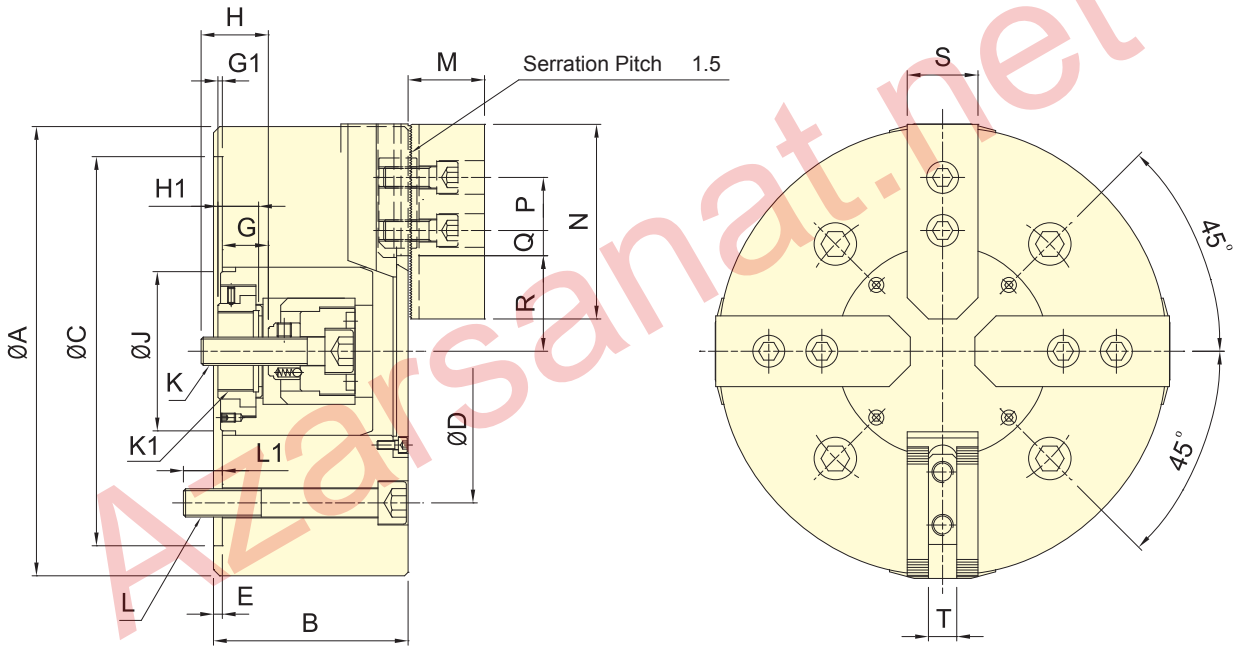

Subject to technical changes

SPECIFICATIONS

Model	Plunger stroke	Jaw stroke (Dia.)	Chucking Range		Max. D.B. pull	Max. Clamping force	Max. speed	I Moment of inertia	Weight	Matching cyl.	Max. pressure
			Max.	Min.							
	mm	mm	mm	mm	kN (kgf)	kN (kgf)	min^{-1} (r.p.m.)	$kg{\cdot}m^2$	kg		MPa (kgf/cm^2)
4T-08	17	13.6	210	24	16.0(1630)	54.3(5540)	3000	0.15	23.2	RD-120(N)	1.7(17)
4T-10	20	16	254	50	21.6(2200)	79.4(8100)	2100	0.35	44.3	RD-125(N)	2.2(22)
4T-12	20	16	304	50	21.6(2200)	79.4(8100)	1500	0.66	57.6	RD-125(N)	2.2(22)
4T-15	25	19.6	381	60	27.2(2780)	105.3(10750)	1200	2.25	118.3	RD-125(N)	2.7(27)

DIMENSIONS

Model	A	B	C(H6)	D	E	G max.	G min.	G1 max.	G1 min.	H	H1	J	K
4T-08	210	91	170	133.4	5	32	15	2.5	-14.5	29	20	61	M14x2
4T-10	254	110	220	171.4	5	36.5	16.5	10	-10	36	23	90	M16x2
4T-12	304	110	220	171.4	5	36.5	16.5	10	-10	36	23	90	M16x2
4T-15	381	135	300	235	6	44.5	19.5	5	-20	45	28	125	M20x2.5

Model	K1	L	L1	M	N	P	Q max.	Q min.	R max.	R min.	S	T
4T-08	M34x1.5	4~M2	20	38	95	25	25.25	13.25	46.1	39.3	35	14
4T-10	M45x1.5	4~M16	25	43	110	30	32.25	12.75	59	51	40	16
4T-12	M45x1.5	4~M16	25	43	110	30	54.75	15.75	59	51	40	16
4T-15	M55x2	4~M20	30	51	130	30	66.5	12.5	78.9	69.1	50	21

LARGE THRU-HOLE AIR CHUCK(I)

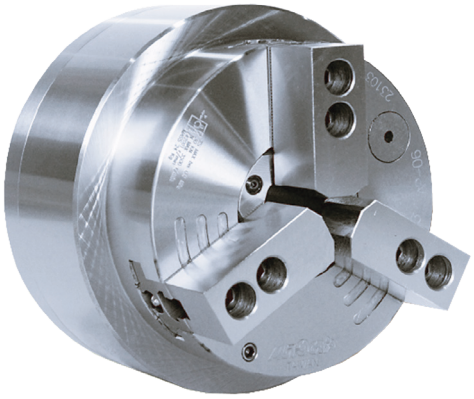

- Large through-hole 3-jaw power chuck with build in air cylinder.
- Patented air supply system, it is easy to install and maintain. No abrasion issue of traditional sealed ring. Maintenance cost and time can be saved.

■ Patent numbers :
Germany : 20.2011.101.818.4 /20.2012.102.498.5
Japan : 3169457 / 3178706 / EU : EP 2517822 B1
China : ZL 2011 2 0141324.9 /ZL 2012 2 0274549.6
Taiwan : M440159 / M415011 / U.S.A. : US8770222 B2
Italy : 0000278076

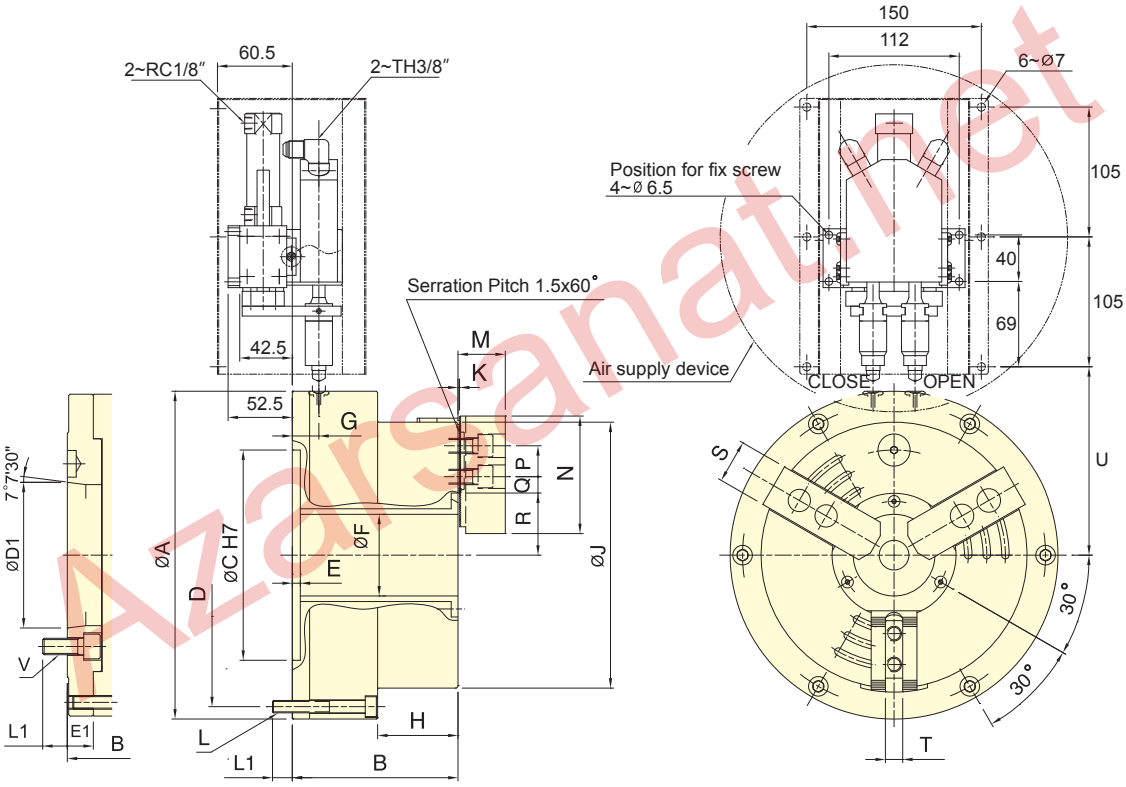

Subject to technical changes

SPECIFICATIONS

Model		Thru-hole Dia.	Jaw stroke (Dia.)	Chucking Dia. Max.	Chucking Dia. Min.	Max. pressure	Max. Clamping force	Max. speed	I Moment of inertia	Weight		Air Consumption
		mm	mm	mm	mm	MPa (kgf/cm²)	kN (kgf)	min⁻¹ (r.p.m.)	kg·m²	kg		lit (at 6kgf/cm²)
AP-52	A6	52	5.9	170	15	0.6(6.1)	40.4(4118)	4200	0.2	26	27	3.1
AP-66	A6	66	7.6	215	24	0.6(6.1)	51.0(5185)	3500	0.4	38	39	5.1
AP-86	A8	86	8.9	268	43	0.6(6.1)	76.0(7723)	3200	0.7	58	60	8.7
AP-115	A8	115	10.6	330	55	0.6(6.1)	80.0(8155)	3000	1.7	92	95	12

DIMENSIONS

Model		A	B		C	D	D1	E	E1	F	G	H	J	K	L
AP-52	A6	235	121	140	170	215	106.38	6.5	19	52	21.5	58.5	170	2	6~M10
AP-66	A6	265	134	153	170	245	106.38	6.5	19	66	21.5	65	215	2	6~M10
AP-86	A8	315	142	169	220	295	139.72	6.5	27	86	21.5	67	268	2	6~M10
AP-115	A8	370	154	181	220	350	139.72	6.5	27	115	21.5	69	330	2	6~M10

Model		L1		M	N	P	Q max.	Q min.	R max.	R min.	S	T	U	V
AP-52	A6	15	18	37	73	20	21.2	9.2	38	35.1	31	12	145.5	6~M12
AP-66	A6	16	18	38	95	25	23.7	8.7	50.2	46.4	35	14	159.5	6~M12
AP-86	A8	16	24	43	110	30	32.2	12.7	62.2	57.8	40	16	184.5	6~M16
AP-115	A8	16	24	51	130	30	44.7	14.7	77	71.7	50	21	212	6~M16

1. The dimensions and the specifications of AP-A type are in red data.

TAIWAN EXCELLENCE 2018

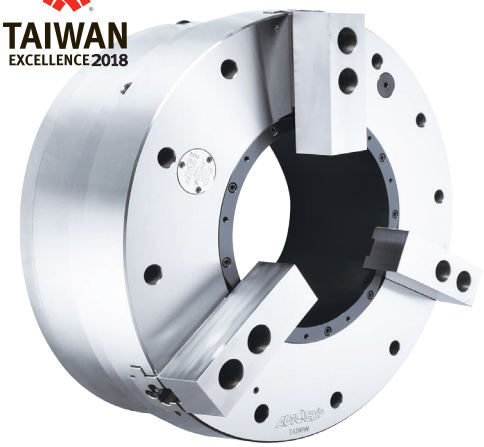

- Large through-hole 3-jaw power chuck with build in air cylinder.
- With build-in "pressure detection" device in chuck which can check the pressure is lowered rapidly within the chuck, guarantee to the security of operating.
- Patented air supply system, it is easy to install and maintain. No abrasion issue of traditional sealed ring. Maintenance cost and time can be saved.

Patent numbers :
Germany : 20.2011.101.818.4 /20.2012.102.498.5
Japan : 3169457 / 3178706 / EU : EP 2517822 B1
China : ZL 2011 2 0141324.9 / ZL 2012 2 0274549.6
Taiwan : M440159 / M415011 / U.S.A. : US8770222 B2
Italy : 0000278076

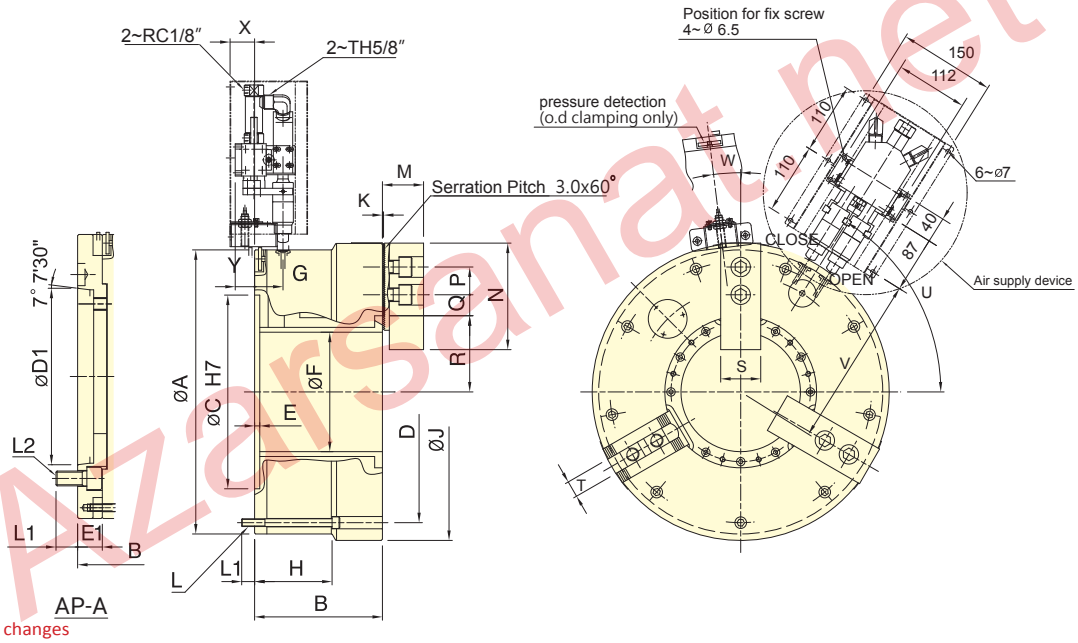

Subject to technical changes

SPECIFICATIONS

Model		Thru-hole Dia.	Jaw stroke (Dia.)	Chucking Dia. Max.	Chucking Dia. Min.	Max. pressure	Max. Clamping force	Max. speed	I Moment of inertia	Weight		Air Consumption
		mm	mm	mm	mm	MPa (kgf/cm²)	kN (kgf)	min⁻¹ (r.p.m.)	kg·m²	kg		lit(at 6kgf/cm²)
AP-145	A11	145	14	420	62	0.6(6.1)	85.0(8667)	1700	3.8	156	182	17.8
AP-185	A15	185	14	460	100	0.6(6.1)	110.0(11216)	1300	6.0	188	223	22
AP-230	A15	230	17	535	170	0.6(6.1)	125.0(12742)	1300	11.1	265	310	34
AP-275	A20	275	17	580	200	0.6(6.1)	140.0(14271)	1100	15.5	301	346	39
AP-320	A20	320	17	658	200	0.6(6.1)	184.0(18762)	1000	27.2	415	505	45
AP-375	A20	375	24	738	260	0.6(6.1)	188.0(19115)	850	44.2	530	545	55

DIMENSIONS

Model		A	B		C	D	D1	E	E1	F	G	H	J	K	L	L1	
AP-145	A11	400	198	231	300	365	196.87	8	33	145	34	120	420	3.5	9~M12	20	31
AP-185	A15	460	198	238	300	405	285.78	8	40	185	44	120	460	3.5	9~M12	20	35
AP-230	A15	515	226	266	380	483	285.78	8	40	230	49	145	535	3.5	6~M16	24	35
AP-275	A20	560	232	272	380	528	412.78	8	40	275	52	152	580	3.5	6~M16	24	35
AP-320	A20	615	256	306	520	580	412.78	8	50	320	55	116.5	658	3.5	9~M16	25	33
AP-375	A20	690	272	322	520	650	412.78	8	50	375	55	127	738	3.5	9~M16	28	33

Model		L2	M	N	P	Q max.	Q min.	R max.	R min.	S	T	U	V	W	X	Y
AP-145	A11	6~M20	63.7	165	43	53.5	23.5	98	91	62	25.5	57°	242	0°	38	20
AP-185	A15	6~M24	63.7	165	43	53.5	23.5	118	111	62	25.5	58°	272	7°	38	20
AP-230	A15	6~M24	71.7	180	60	48.5	18.5	145	136.5	64	25.5	30°	300	7°	33	15
AP-275	A20	6~M24	71.7	180	60	48.5	18.5	167.5	159	64	25.5	30°	322	7°	30	12
AP-320	A20	6~M24	81.5	210	60	60.5	24.5	190	181.5	74	30	52°	350	7°	27	9
AP-375	A20	6~M24	81.5	210	60	66.5	24.5	223.5	211.5	74	30	52°	387	7°	27	9

1. The dimensions and the specifications of AP-A type are in red data.

LARGE THRU-HOLE AIR CHUCK(DOUBLE SPEED JAW STROKE)

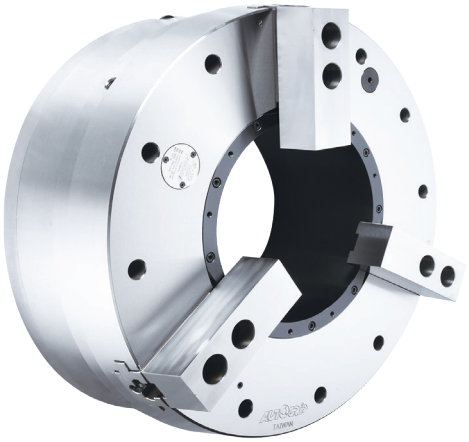

- Large through-hole 3-jaw power chuck with build in air cylinder.
- With build-in"pressure detection"device which can check the rapidly decreasing pressure within the chuck, guarantee to the security when operating.
- Patented air supply system, it is easy to install and maintain. No abrasion issue of traditional sealed ring. Maintenance cost and time can be saved.
- The build-in "clamping detection" device can avoid jaws clamping the workpiece during the rapid stroke stage. This mechanism can also prevent causing the damage of the internal parts or flying out of workpiece.(only for external clamping)
- Extended jaw stroke design can shorten the processing time when gripping.

■ Notice:No clamping in rapid stroke period.

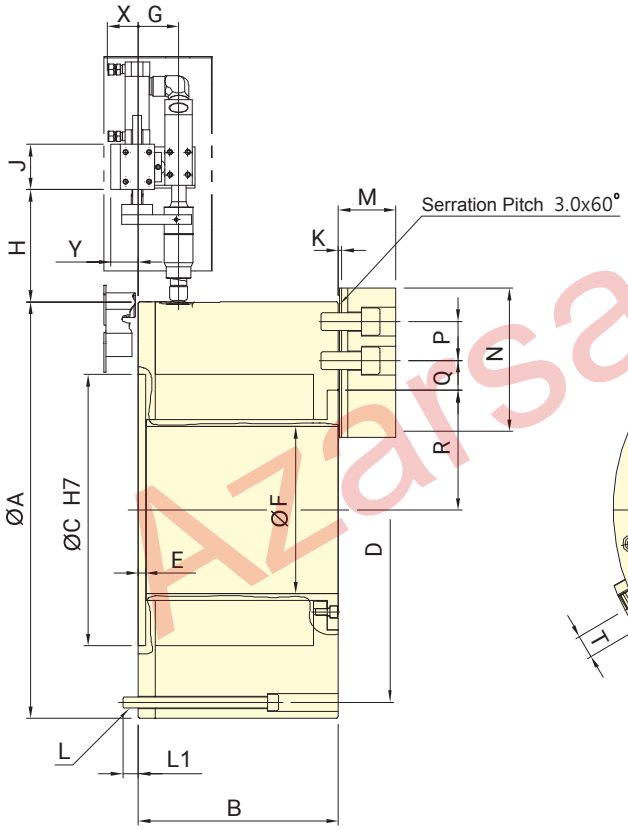

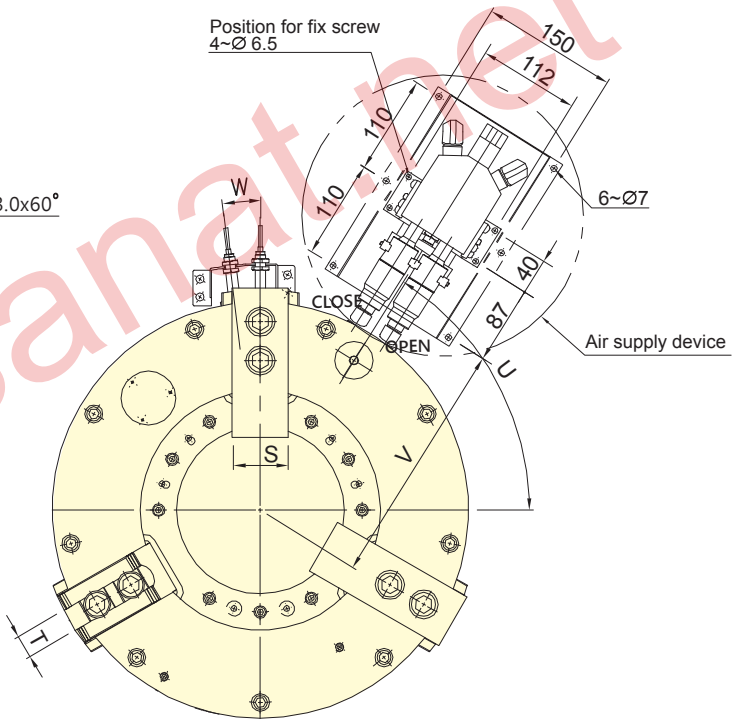

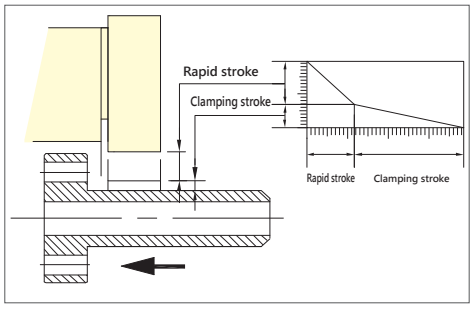

Subject to technical changes

SPECIFICATIONS

Model	Thru-hole Dia.	Jaw stroke (Dia.)		Chucking Dia.		Max. Clamping force	Max. speed	I Moment of inertia	Weight	Air Consumption
				Max.	Min.					
	mm	mm		mm	mm	kN (kgf)	min⁻¹(r.p.m.)	kg·m²	kg	lit(at 6kgf/cm²)
APS-185	185	26	14	460	127	110(11216)	1300	6.45	198	22

DIMENSIONS

Model	A	B	C	D	E	F	G	H	J	K	L	L1	M
APS-185	460	221	300	425	8	185	45	124	50	3.5	9~M12	17	63.7

Model	N	P	Q max.	Q min.	R max.	R min.	S	T	U	V	W	X	Y
APS-185	165	43	37	17	145	125	62	25.5	58	272	7°	38	30

POWER INDEXING CHUCK

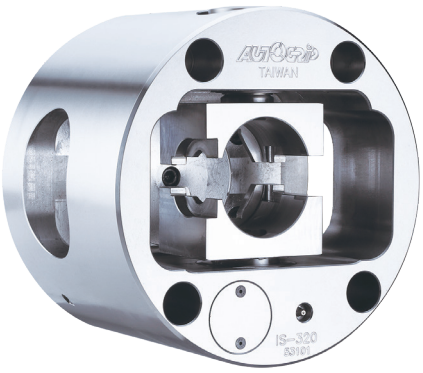

- Indexing operates during the spindle rotation, can perform a quick change between multiple working axles.
- All parts of chuck hardened, ground and lubricated directly.
- Sealed against swarf, chips and coolant.
- High rigidity and high repeatability precision.
- Unique indexing system and hydraulic system, with pressure detection device in chuck, high reliability.

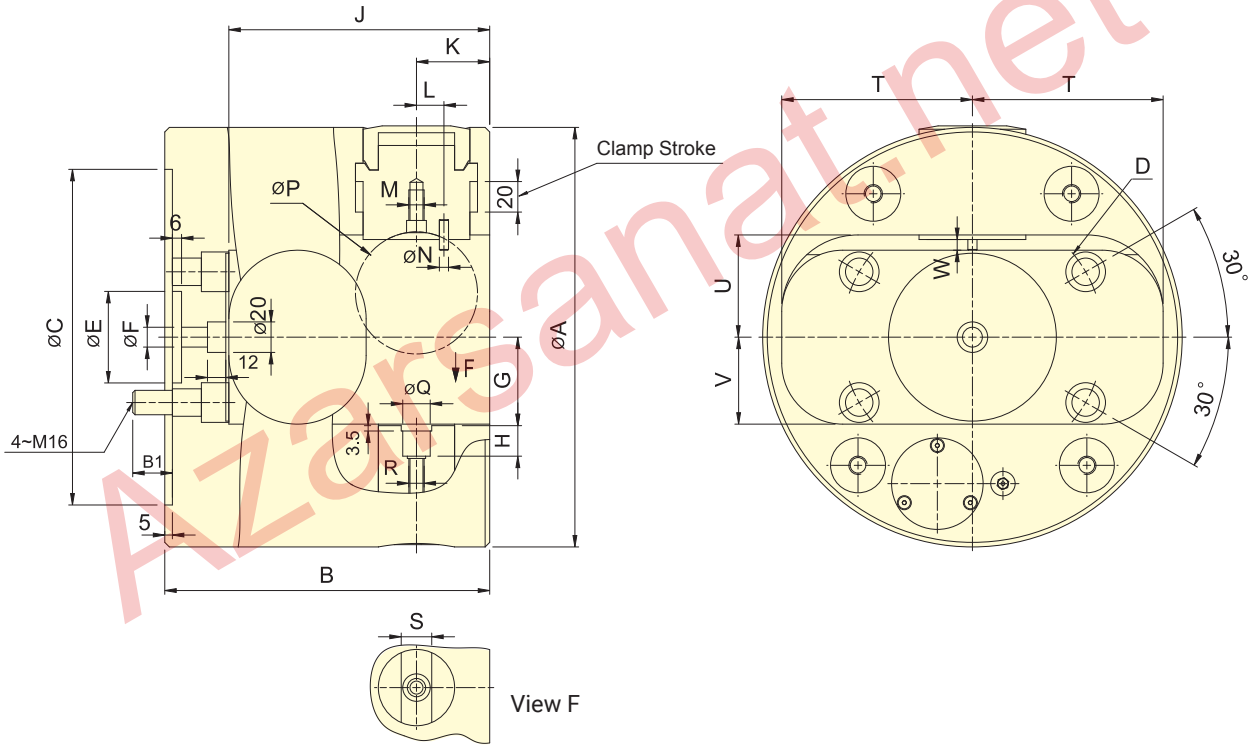

Subject to technical changes

SPECIFICATIONS

Model	Index Angle	Jaw stroke	Chucking Area		Max. pressure	Max. Clamping force	Max. speed	I Moment of inertia	Weight	ROTATING JOINT	Main Spindle Bore
			Dia Max.	Len Max.							
	Deg	mm	mm	mm	kgf/cm²	kN (kgf)	min⁻¹ (r.p.m.)	kg·m²	kg		mm
IS-254	4x90°	20	65	160	45	19.5(1990)	2400	0.41	41	IS-315	86+0.1
IS-275	4x90°	20	80	220	45	25.4(2590)	2100	0.61	52	IS-315	86+0.1
IS-315	4x90°	20	100	230	45	25.0(2550)	1800	1.13	76	IS-315	86+0.1

DIMENSIONS

Model	A	B	B1	C(H6)	D	E	F	G	H	J	K
IS-254	254	190	23	220	171.4	60	13	47.5	18	155	48
IS-275	275	213	26	220	171.4	60	13	58	20	171	48
IS-315	315	232	22	220	171.4	60	13	71	18.5	187	50

Model	L	M	N	P	Q(H7)	R	S(H7)	T	U	V	W
IS-254	13	M8	5	48	18	M10	20	106	57	46.5	5.5
IS-275	18	M10	6	80	18	M10	20	125	67	57	7
IS-315	18	M10	6	75	24	M12	25	125	85	70	7.5

*Index Angle 8x45° or Specific Angle, Please contact AUTOGRIP for more detailed information.Thanks.

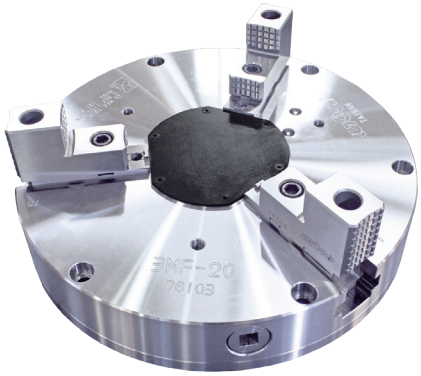

- Thin and lightweight design and increase the z-axis machining range.
- With the center hole cover and dustproof design for the accuracy and service life of the chuck.
- For 5-axis indexing plates and milling machines.

■ 3MF series are not designed for the vertical or horizontal lathes, unless there is a rigid plate and providing adequate support rigidity and strength.

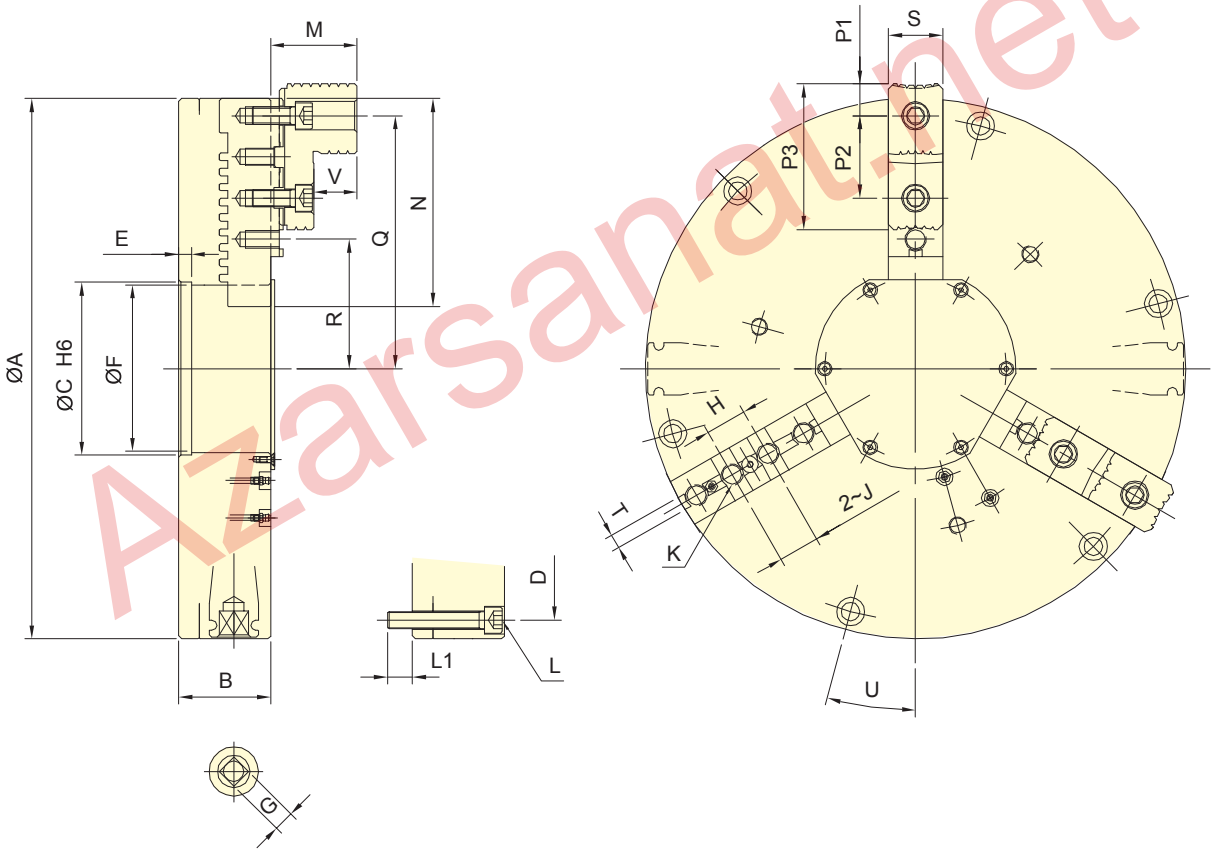

Subject to technical changes

SPECIFICATIONS

Model	Jaw stroke (Dia.)	Chucking Dia.		Max. allowable torque	Max. clamping force	Max. speed	Weight
		Max.	Min.				
	mm	mm	mm	N · m (kgf · m)	kN (kgf)	min^{-1} (r.p.m.)	kg
3MF-20	80	500	142	170 (17.3)	71.2 (7300)	1150	121

DIMENSIONS

Model	A	B	C (H6)	D	E	F	G	H	J (H7)	K	L	L1	M
3MF-20	500	85	160	465	12	155	□19	38.1	19.03	4~M16	6~M16	23	80

Model	N	P1	P2	P3	Q max.	Q min.	R max.	R min.	S	T (h8)	U	V	Y
3MF-20	192.5	29.5	76.2	135	254	214	139.7	99.7	50	12.7	15°	40	30

- PUSH type collet used mainly on turning, CNC, special purpose machines , ect.
- High clamping accuracy, high speed and high rigidity.
- The installation is the same as "Thru-hole power chuck" and they are replaceable with each other. No need to change the "Draw tube".
- Sealed against swarf, chips and coolant.

- The collet used must accord with DIN 6343.
- Patent numbers :
  Taiwan : PAT.NO.M380842
  China : PAT.NO.ZL2010 20113762.X

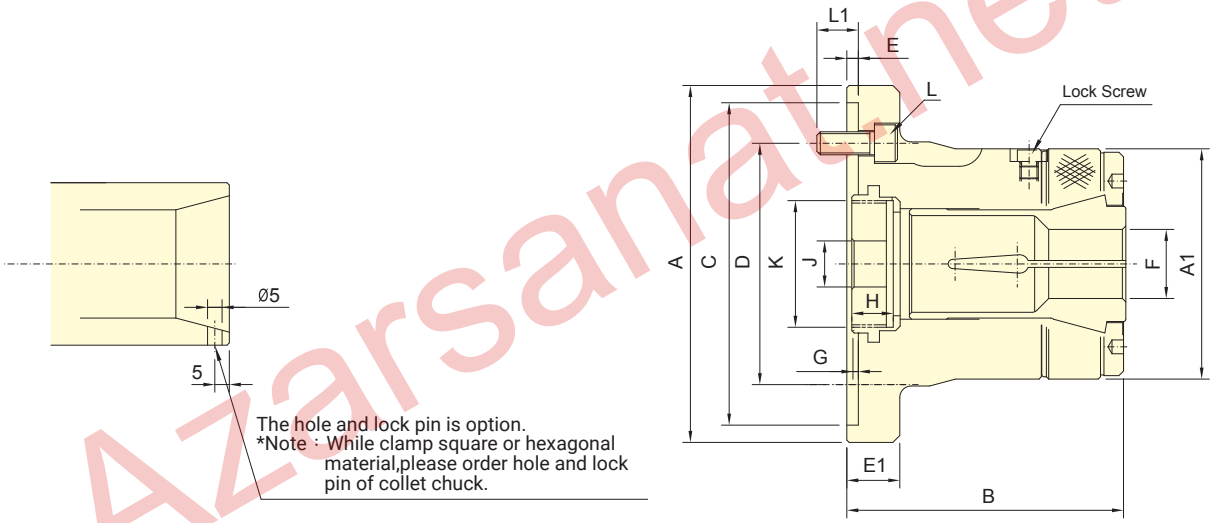

Subject to technical changes

SPECIFICATIONS

Model	Plunger stroke	Max. Chucking Capacity			Max. D.B. pull	Max. clamping force	Max. speed	I Moment of inertia	Weight	Matching steel collet	Matching Cyl.	Max. pressure
		Round	Hexagom	Square								
	mm	mm	mm	mm	kN (kgf)	kN (kgf)	min^{-1} (r.p.m.)	$kg{\cdot}m^2$	kg			MPa (kgf/cm^2)
CL-26	4.5	3~26	4~22	4~18	17.6(1800)	37.9(3870)	8000	0.040	4.3	161E	TK-A533	2.4(24)
CL-30	4.5	3~30	4~26	4~20	19.6(2000)	42.1(4300)	8000	0.038	4.2	163E	TK-A533	2.7(27)
CL-36	6	3~36	6~32	6~26	22.5(2300)	48.5(4950)	6000	0.062	7.0	171E	TK-C643	2.3(23)
CL-42	6	3~42	6~36	6~29	24.5(2500)	52.9(5400)	6000	0.060	6.9	173E	TK-C643	2.5(25)
CL-52	6	5~52	8~45	7~36	27.4(2800)	59.0(6020)	6000	0.101	14.3	177E	TK-A853	2.0(20)
CL-6017	6	5~60	8~52	7~42	29.4(3000)	63.7(6500)	5000	0.098	14.1	185E	TK-1068	1.8(18)
CL-6022	6	5~60	8~52	7~42	29.4(3000)	63.7(6500)	5000	0.126	16.3	185E	TK-1068	1.8(18)
CL-80	6	20~80	18~69	15~56	34.3(3500)	71.5(7300)	4000	0.108	17.8	193E	TK-A1287	1.6(16)

DIMENSIONS

Model	A	A1	B	C(H6)	D	E	E1	F max.	F min.	G max.	G min.	H	J	K max.	L	L1
CL-26	120	85	100	110	82.6	4	23	26	3	7	2.5	15	12	M40x1.5	3~M10x25	16
CL-30	120	85	100	110	82.6	4	23	30	3	7	2.5	15	12	M40x1.5	3~M10x25	16
CL-36	155	100	120	140	104.8	5	23	36	3	7	1	17.5	20	M55x2	3~M10x25	18
CL-42	155	100	120	140	104.8	5	23	42	3	7	1	17.5	20	M55x2	3~M10x25	18
CL-52	185	130	145.5	170	133.4	5	27	52	5	9	3	24	45	M60x2	6~M12x30	20
CL-6017	185	130	145.5	170	133.4	5	27	60	5	9	3	24	45	M75x2	6~M12x30	20
CL-6022	234	130	142	220	171.5	5	32	60	5	13	7	24	45	M85x2	6~M16x30	20
CL-80	234	156	163	220	171.5	5	32	80	20	15.5	9.5	22	45	M100x2	6~M16x30	20

- PUSH type collet used mainly on turning, CNC, special purpose machines , ect.
- High clamping accuracy, high speed and high rigidity.
- The installation is the same as "Thru-hole power chuck" and they are replaceable with each other. No need to change the "Draw tube".
- Sealed against swarf, chips and coolant.

- The collet used must accord with DIN 6343.

- Patent numbers :
  Taiwan : PAT.NO.M380842
  China : PAT.NO.ZL2010 20113762.X

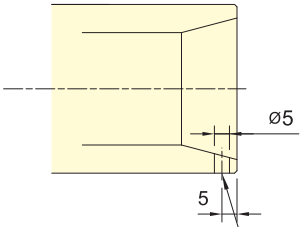

The hole and lock pin is option.
*Note : While clamp square or hexagonal material,please order hole and lock pin of collet chuck.

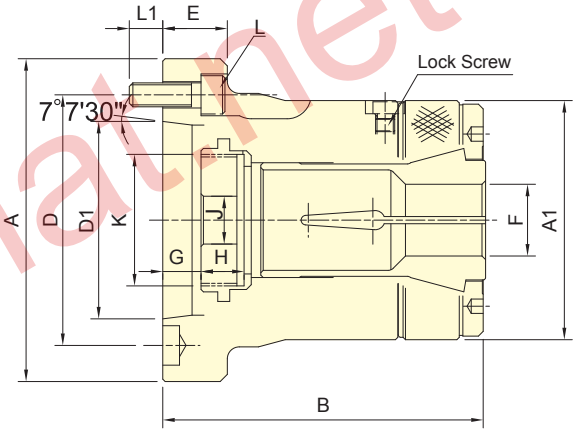

Subject to technical changes

SPECIFICATIONS

Model		Plunger stroke	Max. Chucking Capacity			Max. D.B. pull	Max. clamping force	Max. speed	I Moment of inertia	Weight	Matching steel collet	Matching Cyl.	Max. pressure
			Round	Hexagom	Square								
		mm	mm	mm	mm	kN (kgf)	kN (kgf)	min^{-1} (r.p.m.)	$kg{\cdot}m^2$	kg			MPa (kgf/cm^2)
CL-26	A4	4.5	3~26	4~22	4~18	17.6(1800)	37.9(3870)	8000	0.040	4.2	161E	TK-A533	2.4(24)
CL-30	A4	4.5	3~30	4~26	4~20	19.6(2000)	42.1(4300)	8000	0.038	4.1	163E	TK-A533	2.7(27)
CL-36	A5	6	3~36	6~32	6~26	22.5(2300)	48.5(4950)	6000	0.058	6.3	171E	TK-C643	2.3(23)
CL-42	A5	6	3~42	6~36	6~29	24.5(2500)	52.9(5400)	6000	0.057	6.1	173E	TK-C643	2.5(25)
CL-42	A6	6	3~42	6~36	6~29	24.5(2500)	52.9(5400)	6000	0.061	7.5	173E	TK-C643	2.5(25)
CL-52	A6	6	5~52	8~45	7~36	27.4(2800)	59.0(6020)	6000	0.093	13.8	177E	TK-A853	2.0(20)
CL-60	A6	6	5~60	8~52	7~42	29.4(3000)	63.7(6500)	5000	0.091	13.5	185E	TK-1068	1.8(18)
CL-60	A8	6	5~60	8~52	7~42	29.4(3000)	63.7(6500)	5000	0.104	14.5	185E	TK-1068	1.8(18)
CL-80	A8	6	20~80	18~69	15~56	34.3(3500)	71.5(7300)	4000	0.120	19.8	193E	TK-A1287	1.6(16)

DIMENSIONS

Model		A	A1	B	D	D1	E	F max.	F min.	G max.	G min.	H	J	K max.	L	L1
CL-26	A4	110	85	108	82.6	63.51	25	26	3	9.5	5	15	12	M40x1.5	3~M10x30	15
CL-30	A4	110	85	108	82.6	63.51	25	30	3	9.5	5	15	12	M40x1.5	3~M10x30	15
CL-36	A5	135	100	130	104.8	82.56	27	36	3	14	8	17.5	20	M55x2	4~M10x30	14
CL-42	A5	135	100	130	104.8	82.56	27	42	3	14	8	17.5	20	M55x2	4~M10x30	14
CL-42	A6	165	100	130	133.4	106.38	32	42	3	17	11	17.5	20	M60x2	4~M12x35	16
CL-52	A6	170	130	154	133.4	106.38	27	52	5	10.5	4.5	24	45	M60x2	4~M12x35	20
CL-60	A6	170	130	154	133.4	106.38	27	60	5	10.5	4.5	24	45	M75x2	4~M12x35	20
CL-60	A8	210	130	147.5	171.5	139.72	35	60	5	3.5	-2.5	24	45	M85x2	4~M16x40	22
CL-80	A8	210	156	175	171.5	139.72	35	80	20	7.5	1.5	22	45	M100x2	6~M16x40	22

CB/CB-A DRAW COLLET CHUCK

- DRAW type collet used mainly on turning, CNC, special purpose machines , ect.
- High clamping accuracy, high speed and high rigidity.
- The installation is the same as "Thru-hole power chuck" and they are replaceable with each other, no need to change the "Draw tube".
- This is a completely sealed design, which prevents coolant and chips from entering the spindle.

■ J is the hole diameter of blank draw nut.
K is the maximum thread specification and it could be customize.

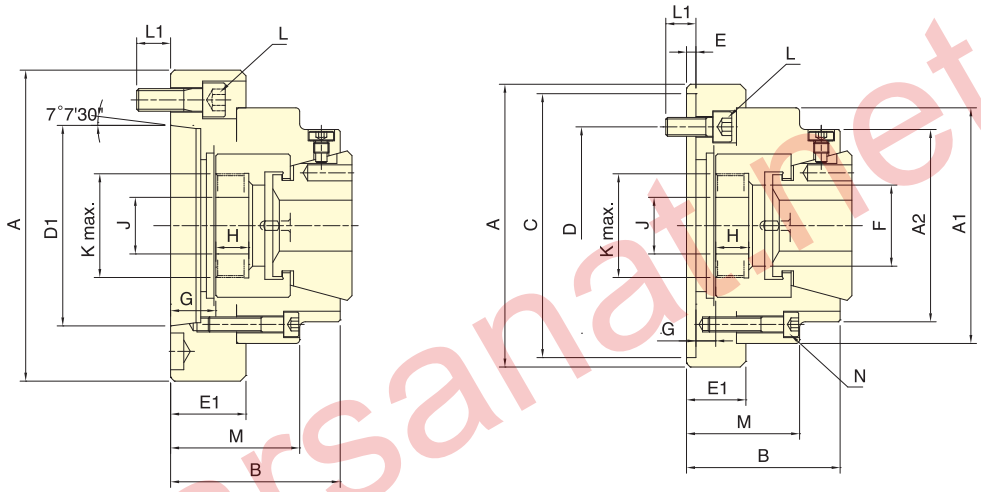

Subject to technical changes

SPECIFICATIONS

Model		Plunger stroke	Max. Chucking Capacity			Max. D.B. pull	Max. clamping force	Max. speed	Weight	Matching steel collet	Matching Cyl.	Max. pressure
			Round	Hexagom	Square							
		mm	mm	mm	mm	kN (kgf)	kN (kgf)	min^{-1} (r.p.m.)	kg			MPa (kgf/cm^2)
CB-42		4.5	4~42	7~36	7~30	34.3(3500)	78.4(8000)	7000	6.5	RG-42	TK-B846	2.8(28)
CB-42	A5	4.5	4~42	7~36	7~30	34.3(3500)	78.4(8000)	7000	6.2	RG-42	TK-B846	2.8(28)
CB-42	A6	4.5	4~42	7~36	7~30	34.3(3500)	78.4(8000)	7000	7.4	RG-42	TK-B846	2.8(28)
CB-52		4.5	4~52	7~36	7~45	39.2(4000)	92.1(9400)	7000	6	RG-52	TK-A853	3.2(32)
CB-5217		4.5	4~52	7~36	7~45	39.2(4000)	92.1(9400)	7000	9.6	RG-52	TK-A853	3.2(32)
CB-52	A5	4.5	4~52	7~36	7~45	39.2(4000)	92.1(9400)	7000	6.5	RG-52	TK-A853	3.2(32)
CB-52	A6	4.5	4~52	7~36	7~45	39.2(4000)	92.1(9400)	7000	7.8	RG-52	TK-A853	3.2(32)
CB-65		4.5	4~65	8~56	8~46	44.1(4500)	103(10500)	5500	15	RG-65	TK-1068	3.0(30)
CB-65	A6	4.5	4~65	8~56	8~46	44.1(4500)	103(10500)	5500	13.6	RG-65	TK-1068	3.0(30)
CB-65	A8	4.5	4~65	8~56	8~46	44.1(4500)	103(10500)	5500	17.6	RG-65	TK-1068	3.0(30)
CB-80		6	5~80	8~68	8~56	50.0(5100)	115(11730)	5500	19	RG-80	TK-A1287	2.3(23)
CB-80	A8	6	5~80	8~68	8~56	50.0(5100)	115(11730)	5500	19	RG-80	TK-A1287	2.3(23)

DIMENSIONS

Model		A	A1	A2	B	C(H6)	D	D1	E	E1	F	G max.	G min.	H	J	K max.	L	L1	M	N
CB-42		150	125	102	81.5	140	104.8	-	5	31	43	10.5	6	17.5	30	M55x2	3~M10x25	11	60	4~M8
CB-42	A5	140	125	102	91.5	-	104.8	82.56	-	41.5	43	25.5	21	17.5	30	M55x2	4~M10x25	12	70	4~M8
CB-42	A6	165	125	102	91.5	-	133.4	106.38	-	45	43	29	24.5	17.5	30	M55x2	4~M12x35	18	73.5	4~M8
CB-52		150	125	102	83.5	140	104.8	-	5	31.5	53	11	6.5	17.5	30	M60x2	4~M10x25	16	62.5	4~M8
CB-5217		180	125	102	87	170	133.4	-	5	35	53	14.5	10	17.5	30	M60x2	4~M12x30	18	66	4~M8
CB-52	A5	140	125	102	93.5	-	104.8	82.56	-	41.5	53	26	21.5	17.5	30	M60x2	4~M10x30	16	72.5	4~M8
CB-52	A6	165	125	102	99	-	133.4	106.38	-	47	53	31.5	27	17.5	30	M60x2	6~M12x35	18	78	4~M8
CB-65		185	145	120	100	170	133.4	-	6	50	66	13.5	9	21.5	32	M75x2	6~M12x40	20	73.5	4~M8
CB-65	A6	165	145	120	111	-	133.4	106.38	-	61	66	30.5	26	21.5	32	M75x2	4~M12x40	20	84.5	4~M8
CB-65	A8	207	145	120	107	-	171.4	139.72	-	57	66	26.5	22	21.5	32	M75x2	4~M18x40	24	80.5	4~M8
CB-80		235	175	150	112	220	171.4	-	5	37	82.5	14	8	25	32	M85x2	6~M16x30	22	87	6~M10
CB-80	A8	210	175	150	125	-	171.4	139.72	-	50	82.5	27	21	25	32	M85x2	6~M16x50	24	100	6~M10

- End stop clamping.
- With backgauge block mechanism, positioning and the length control of the workpiece can be more precise.
- Backgauge block and cover are interchangeable. The chip-proof function can also be achieved.

■ J is the hole diameter of blank draw nut.
K is the maximum thread specification, and it could be customize.

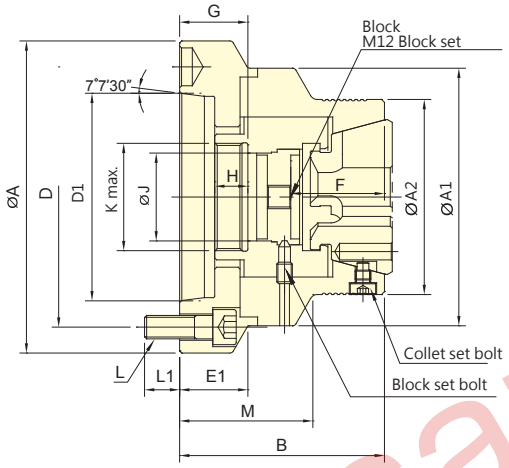

CBE-A

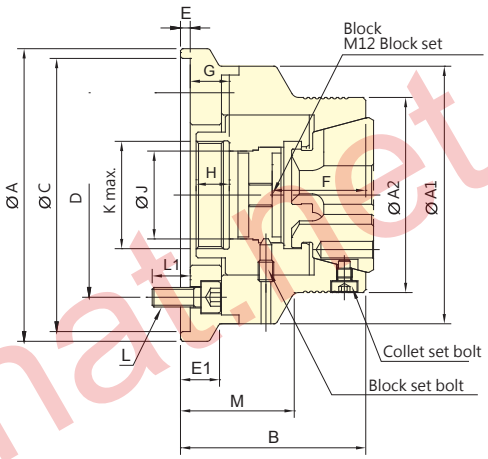

CBE

Subject to technical changes

SPECIFICATIONS

Model		Plunger stroke	Max. Chucking Capacity Round	Hexagom	Square	Max. D.B. pull	Max. clamping force	Max. speed	Weight	Matching steel collet	Matching Cyl.	Max. pressure
		mm	mm	mm	mm	kN (kgf)	kN (kgf)	min^{-1} (r.p.m.)	kg			MPa (kgf/cm^2)
CBE-42		4.5	4~42	7~36	7~30	34.3(3500)	78.4(8000)	7000	6	RG-42	TK-B846	2.8(28)
CBE-4212		4.5	4~42	7~36	7~30	34.3(3500)	78.4(8000)	7000	6	RG-42	TK-B846	2.8(28)
CBE-42	A5	4.5	4~42	7~36	7~30	34.3(3500)	78.4(8000)	7000	6.3	RG-42	TK-B846	2.8(28)
CBE-42	A6	4.5	4~42	7~36	7~30	34.3(3500)	78.4(8000)	7000	7.4	RG-42	TK-B846	2.8(28)
CBE-52		4.5	4~52	7~36	7~30	39.2(4000)	92.1(9400)	7000	6.9	RG-52	TK-A853	3.2(32)
CBE-5212		4.5	4~52	7~36	7~30	39.2(4000)	92.1(9400)	7000	6.7	RG-52	TK-A853	3.2(32)
CBE-5217		4.5	4~52	7~36	7~30	39.2(4000)	92.1(9400)	7000	8.9	RG-52	TK-A853	3.2(32)
CBE-52	A5	4.5	4~52	7~36	7~30	39.2(4000)	92.1(9400)	7000	7.8	RG-52	TK-A853	3.2(32)
CBE-52	A6	4.5	4~52	7~36	7~30	39.2(4000)	92.1(9400)	7000	8.3	RG-52	TK-A853	3.2(32)
CBE-65		4.5	4~65	8~56	8~46	44.1(4500)	103(10500)	6000	9.3	RG-65	TK-1068	3.0(30)
CBE-6517		4.5	4~65	8~56	8~46	44.1(4500)	103(10500)	6000	8.6	RG-65	TK-1068	3.0(30)
CBE-65	A5	4.5	4~65	8~56	8~46	44.1(4500)	103(10500)	6000	10.8	RG-65	TK-1068	3.0(30)
CBE-65	A6	4.5	4~65	8~56	8~46	44.1(4500)	103(10500)	6000	9.5	RG-65	TK-1068	3.0(30)
CBE-65	A8	4.5	4~65	8~56	8~46	44.1(4500)	103(10500)	6000	9.5	RG-65	TK-1068	3.0(30)

DIMENSIONS

Model		A	A1	A2	B	C(H6)	D	D1	E	E1	F	G max.	G min.	H	J	K max.	L	L1	M
CBE-42		150	132	100	95	140	104.8	-	5	20	48	27.5	23	17	45	M55x2	4~M10x25	19.5	58
CBE-4212		132	132	100	95	120	100	-	5	-	48	27.5	23	17	45	M55x2	4~M10x25	19.5	58
CBE-42	A5	132	132	100	105	-	104.8	82.56	-	-	48	37.5	33	17	45	M55x2	4~M10x30	16	68
CBE-42	A6	160	132	100	105	-	133.4	106.38	-	35	48	37.5	33	17	45	M55x2	4~M12x35	18	68
CBE-52		150	140	107	99	140	104.8	-	5	-	52	22.5	18	17	56	M60x2	4~M10x20	14.5	60
CBE-5212		140	140	107	99	120	100	-	5	-	52	22.5	18	17	56	M60x2	4~M10x20	14.5	60
CBE-5217		180	140	107	109	170	133.4	-	6	-	52	31.5	27	17	56	M60x2	4~M12x30	18	70
CBE-52	A5	140	140	107	109	-	104.8	82.56	-	-	52	37.5	33	17	56	M60x2	4~M10x30	16	70
CBE-52	A6	160	140	107	109	-	133.4	106.37	-	-	52	37.5	33	17	56	M60x2	4~M12x35	18	70
CBE-65		157	157	122	116	140	104.8	-	6	-	56	40.5	36	17.5	68	M75x2	4~M10x30	18	74
CBE-6517		180	157	122	114	170	133.4	-	6	24	56	40.5	36	17.5	68	M75x2	4~M12x30	18	72
CBE-65	A5	157	157	122	114	-	104.8	82.56	-	-	56	38.5	34	17.5	68	M75x2	4~M10x25	16	72
CBE-65	A6	157	157	122	112	-	133.4	106.38	-	-	56	36.5	32	17.5	68	M75x2	4~M12x35	18.5	70
CBE-65	A8	202	157	122	116	-	171.4	139.72	-	38	56	36.5	32	17.5	68	M75x2	4~M16x35	24	74

- Clamping push with the backgauge block mechanism, collet will not be pushed, can precise positioning for workpiece length, make the precision of the length control more precise.
- Match Autogrip Rubber collet, clamping direction perpendicular to axis, never occur that situation of collet push workpiece.
- Backgauge block and cover able to interchangeable use, as well as application and chip-proof function.

■ J is the hole diameter of blank draw nut.
K is the maximum thread specification and it could be customize.

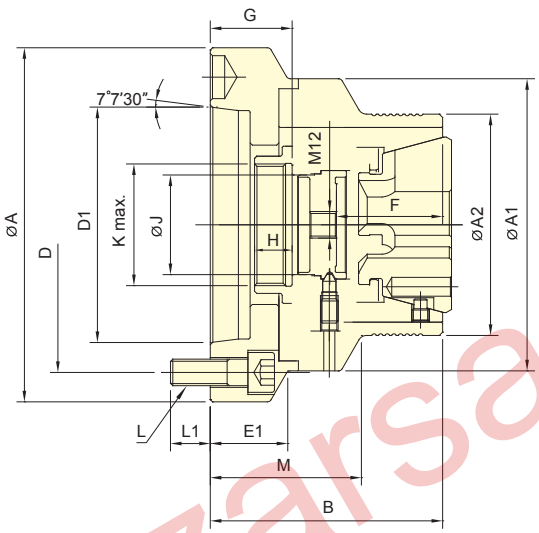

CBD-A

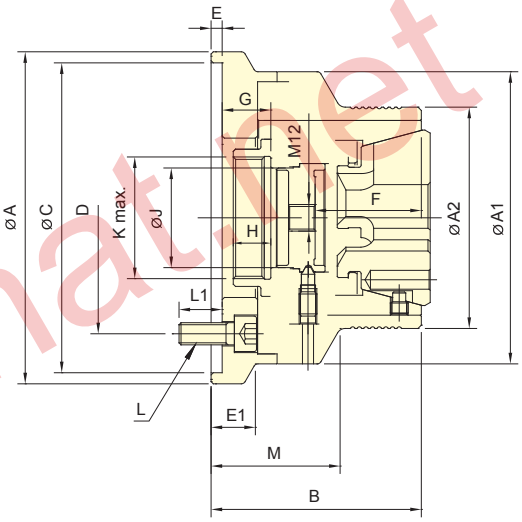

CBD

Subject to technical changes

SPECIFICATIONS

Model		Plunger stroke	Max. Chucking Capacity			Max. D.B. pull	Max. clamping force	Max. speed	Weight	Matching steel collet	Matching Cyl.	Max. pressure
			Round	Hexagom	Square							
		mm	mm	mm	mm	kN (kgf)	kN (kgf)	min^{-1} (r.p.m.)	kg			MPa (kgf/cm^2)
CBD-52		4.5	4~52	7~36	7~45	39.2(4000)	92.1(9400)	7000	7.3	RG-52	TK-A853	3.2(32)
CBD-5212		4.5	4~52	7~36	7~45	39.2(4000)	92.1(9400)	7000	7.1	RG-52	TK-A853	3.2(32)
CBD-5217		4.5	4~52	7~36	7~45	39.2(4000)	92.1(9400)	7000	10.9	RG-52	TK-A853	3.2(32)
CBD-52	A5	4.5	4~52	7~36	7~45	39.2(4000)	92.1(9400)	7000	7.8	RG-52	TK-A853	3.2(32)
CBD-52	A6	4.5	4~52	7~36	7~45	39.2(4000)	92.1(9400)	7000	9.1	RG-52	TK-A853	3.2(32)
CBD-65		4.5	4~65	8~56	8~46	44.1(4500)	103(10500)	6000	9.3	RG-65	TK-1068	2.7(27)
CBD-6517		4.5	4~65	8~56	8~46	44.1(4500)	103(10500)	6000	8.6	RG-65	TK-1068	2.7(27)
CBD-65	A5	4.5	4~65	8~56	8~46	44.1(4500)	103(10500)	6000	10.8	RG-65	TK-1068	2.7(27)
CBD-65	A6	4.5	4~65	8~56	8~46	44.1(4500)	103(10500)	6000	9.5	RG-65	TK-1068	2.7(27)
CBD-65	A8	4.5	4~65	8~56	8~46	44.1(4500)	103(10500)	6000	9.5	RG-65	TK-1068	2.7(27)

DIMENSIONS

Model		A	A1	A2	B	C(H6)	D	D1	E	E1	F	G max.	G min.	H	J	K max.	L	L1	M
CBD-52		150	140	116	99	140	104.8	-	5	-	52	24	19.5	17	56	M60x2	4~M10x20	14.5	57
CBD-5212		140	140	116	99	120	100	-	5	-	52	22	17.5	17	56	M60x2	4~M10x20	14.5	57
CBD-5217		180	140	116	109	170	133.4	-	6	-	52	33	28.5	17	56	M60x2	4~M12x30	18	67
CBD-52	A5	140	140	116	109	-	104.8	82.56	-	-	52	39	34.5	17	56	M60x2	4~M10x30	16	67
CBD-52	A6	160	140	116	109	-	133.4	106.37	-	-	52	39	34.5	17	56	M60x2	4~M12x35	18	67
CBD-65		157	157	132	114	140	104.8	-	6	-	54	35	30.5	17.5	68	M75x2	4~M10x30	18	72
CBD-6517		180	157	132	112	170	133.4	-	6	24	54	33	28.5	17.5	68	M75x2	4~M12x30	18	70
CBD-65	A5	157	157	132	112	-	104.8	82.56	-	-	54	39	34.5	17.5	68	M75x2	4~M10x25	16	70
CBD-65	A6	157	157	132	110	-	133.4	106.38	-	-	54	37	32.5	17.5	68	M75x2	4~M12x35	18.5	68
CBD-65	A8	202	157	132	114	-	171.4	139.72	-	38	54	41	36.5	17.5	68	M75x2	4~M16x35	24	72

- Build-in cylinder, ideal for drilling machines, milling machines and machining centers
- Work with Autogrip's rubber collet(RG series), quick change and saving runtime.
- Two modes for the media supply: side-supply mode or baseplate-supply mode.

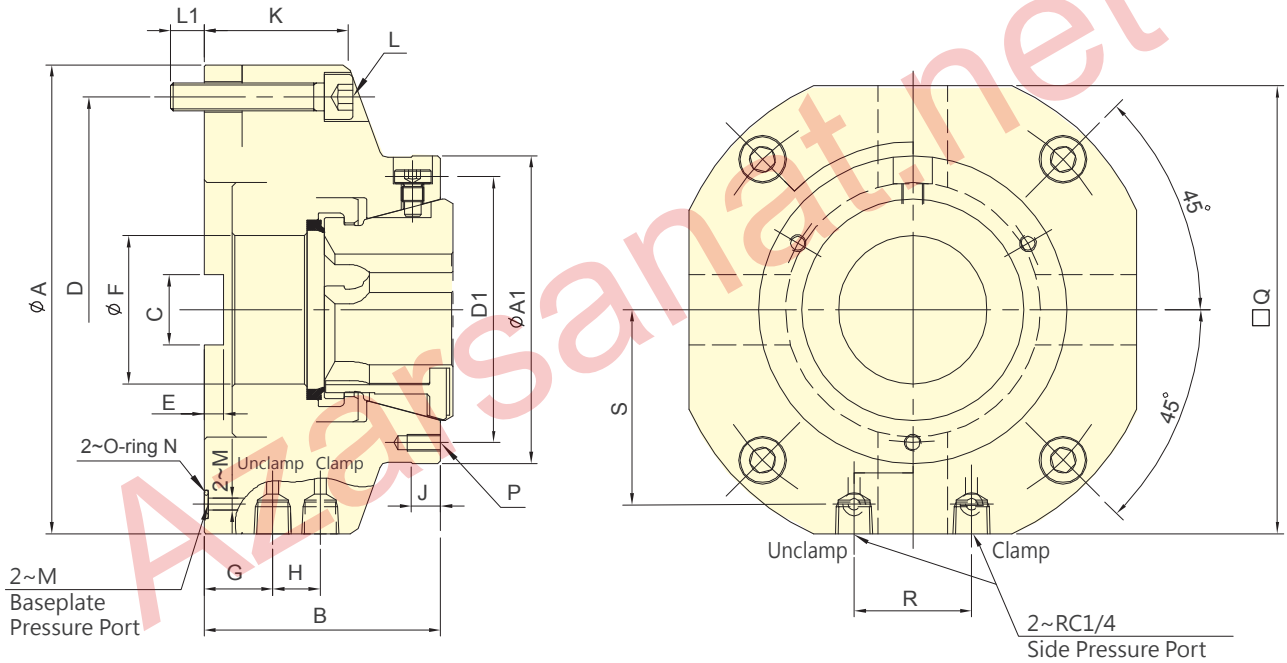

Subject to technical changes

SPECIFICATIONS

Model	Jaw stroke(Dia.)	Max. Chucking Capacity			Max. clamping force	Weight	Matching steel collet	Max. pressure
		Round	Hexagom	Square				
	mm	mm	mm	mm	kN (kgf)	(kg)		MPa (kgf/cm²)
SCB-52	± 0.5	4~52	7~45	7~36	80(8150)	8.6	RG-52	4.0(40)
SCB-65	± 0.5	4~65	8~56	8~46	105(10700)	10.2	RG-65	4.2(42)

DIMENSIONS

Model	A (g6)	A1	B	C	D	D1	E	F	G	H
SCB-52	175	110	84.5	25	152	95	7	53	24.5	17
SCB-65	192	130	94	30	169	114	9	66	26.5	20

Model	J	K	L	L1	M	N	P	Q	R	S
SCB-52	10	51.5	4~M10	12	4.2	P7	3~M6x12	160	42	69.5
SCB-65	10	61.5	4~M10	12.5	4.2	P7	3~M6x12	175	50	77

RUBBER GRIP COLLET

- Rubber grip collet for push type or draw type collet chucks.
- Full griping area: high rigidity, more gripping force. Gripping smoothly: prevent to damage the workpiece.
- More accurate than standard spring collets. Accuracy: With customized rubber grip collet, the accuracy can reach ±10μm.
- Grip Range: ±0.5mm.
- Quick change and easy.
- Dust-proof and swarf-proof design.

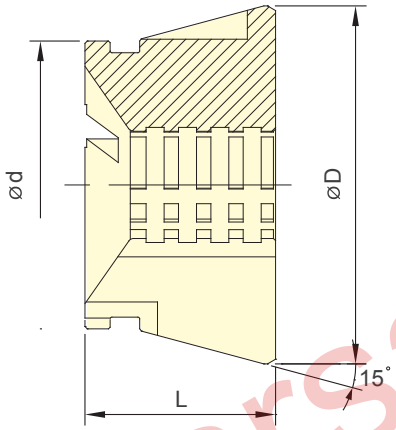

RG-RT

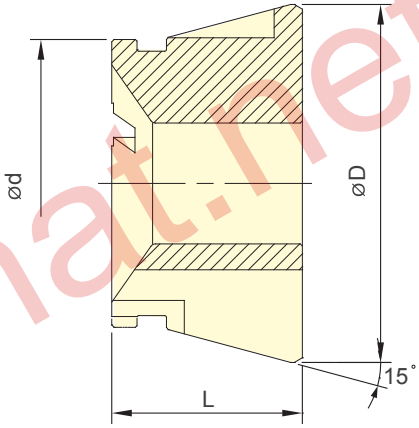

RG-R

Subject to technical changes

SPECIFICATIONS

Model	Max. Chucking Capacity Round mm	d	D	L	Matching Collect Chuck
RG-42R	4~42	54	79.3	42	CB-42,CBE-42
RG-42RT	4~42	54	79.3	42	CB-42,CBE-42
RG-52R	4~52	66	79.3	46	CB-52,CBD-52,CBE-52, SCB-52
RG-52RT	4~52	66	79.3	46	CB-52,CBD-52,CBE-52, SCB-52
RG-65R	4~65	80	99.5	53	CB-65,CBD-65,CBE-65, SCB-65
RG-65RT	4~65	80	99.5	53	CB-65,CBD-65,CBE-65, SCB-65

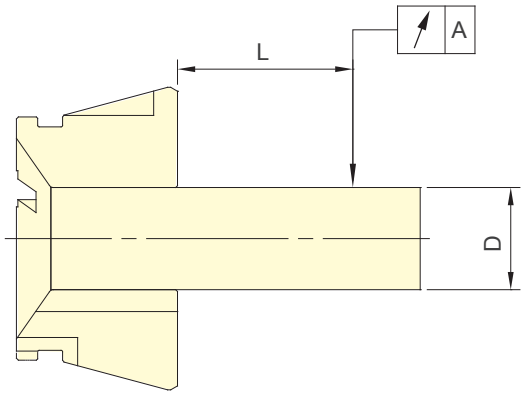

Test Bar D(S,H)	L	A DIN	
	mm	Class1	Class2
3.0~6.0	16	0.015	0.020
6.0~10.0	25	0.015	0.020
10.0~18.0	40	0.020	0.030
18.0~24.0	50	0.020	0.030
24.0~30.0	60	0.020	0.030
30.0~50.0	80	0.030	0.040
50.0~60.0	100	0.030	0.040

Note1 : Collets chuck are conformed to DIN 6343 Class2.
Note2 : AUTOGRIP's rubber grip collets are conformed to DIN 6343 Class1.

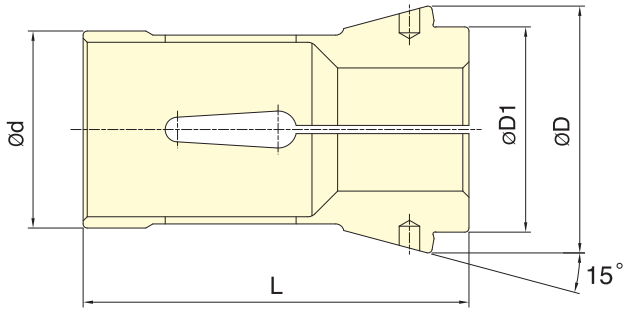

DIN 6343 Collet standard

Subject to technical changes

DIMENSIONS

Collet	Max. Chucking Capacity (mm)			d	D	D1	L	Matching Collet Chuck
	Round	Hexagom	Square					
161E	3~26	4~22	4~18	32	45	34	75	CL-26, CL-26A4
163E	3~30	4~26	4~20	35	48	38	80	CL-30, CL-30A4
171E	3~36	6~32	6~26	42	55	42	94	CL-36, CL-36A5
173E	3~42	6~36	6~29	48	60	50	94	CL-42, CL-42A5, CL-42A6
177E	5~52	8~45	7~36	58	70	60	94	CL-52, CL-52A6
185E	5~60	8~52	7~42	66	84	73	110	CL-6017, CL-6022, CL-60A6, CL-60A8
193E	20~80	18~69	15~56	90	107	92	130	CL-80, CL-80A8

Test Bar D(S,H)	L	A DIN	
	mm	Class 1	Class 2
0.5~1.0	3	0.015	0.015
1.0~1.6	6	0.015	0.020
1.6~3.0	10	0.015	0.020
3.0~6.0	16	0.015	0.020
6.0~10.0	25	0.015	0.020
10.0~18.0	40	0.020	0.030
18.0~24.0	50	0.020	0.030
24.0~30.0	60	0.020	0.030
30.0~50.0	80	0.030	0.040
50.0~60.0	100	0.030	0.040

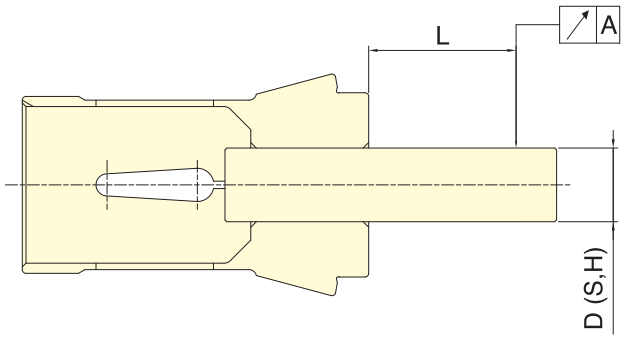

Note: Collets chuck are conformed to DIN 6343 Class2.

STATIONARY CHUCK WITH THRU-HOLE

- STATIONARY CHUCK with two or three jaws for drilling, milling and other machines.
- Specification and size of matching chuck for model VH-200 is the same as model 2H.
- Specification and size of matching chuck for model VH-300 is the same as model 3H.

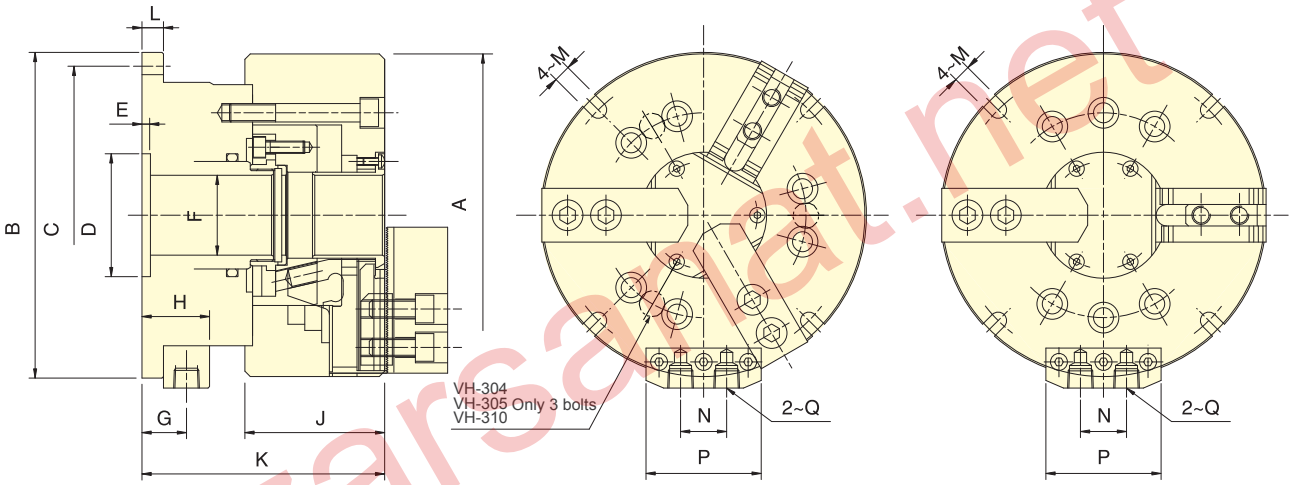

Subject to technical changes

SPECIFICATIONS

Model	Eff. Piston area		Jaw stroke(Dia.)	Max. pressure	Weight
	Extend	Retract			
	cm²	cm²	mm	MPa(kgf/cm²)	kg
VH-204	49.7	46.5	5.4	2.0(20)	7.9
VH-304	49.7	46.5	5.4	3.0(30)	8.1
VH-205	66.0	58.9	5.4	2.0(20)	11.7
VH-305	66.0	58.9	5.4	3.0(30)	11.9
VH-206	103.1	94.4	5.5	1.6(16)	19.8
VH-306	103.1	94.4	5.5	2.3(23)	20.2
VH-208	125.7	115.4	7.4	2.0(20)	32.3
VH-308	125.7	115.4	7.4	3.0(30)	33.6
VH-210	202.6	189.3	8.8	1.5(15)	55.5
VH-310	202.6	189.3	8.8	2.3(23)	56.5

DIMENSIONS

Model	A	B	C	D(H8)	E	F	G	H	J	K	L	M	N	P	Q
VH-204	110	150	132	50	5	23	23	34	59	106.5	12	9	26	62	RC1/4
VH-304	110	150	132	50	5	23	23	34	59	106.5	12	9	26	62	RC1/4
VH-205	135	168	150	60	5	30	23	34	60	111	12	9	26	62	RC1/4
VH-305	135	168	150	60	5	30	23	34	60	111	12	9	26	62	RC1/4
VH-206	169	194	176	80	5	40	25	36	81	141	14	11	26	62	RC1/4
VH-306	169	194	176	80	5	40	25	36	81	141	14	11	26	62	RC1/4
VH-208	210	212	190	80	5	45	29	44	91	158	14	13.5	30	75	RC3/8
VH-308	210	212	190	80	5	45	29	44	91	158	14	13.5	30	75	RC3/8
VH-210	254	266	246	90	6	70	32	47	100	190	17	13	30	75	RC3/8
VH-310	254	266	246	90	6	70	32	47	100	190	17	13	30	75	RC3/8

STATIONARY CHUCK

- STATIONARY CHUCK with two or three jaws for drilling, milling and other machines.
- Specification and size of matching chuck for model VP-200 is the same as model 2P.
- Specification and size of matching chuck for model VP-300 is the same as model 3P.

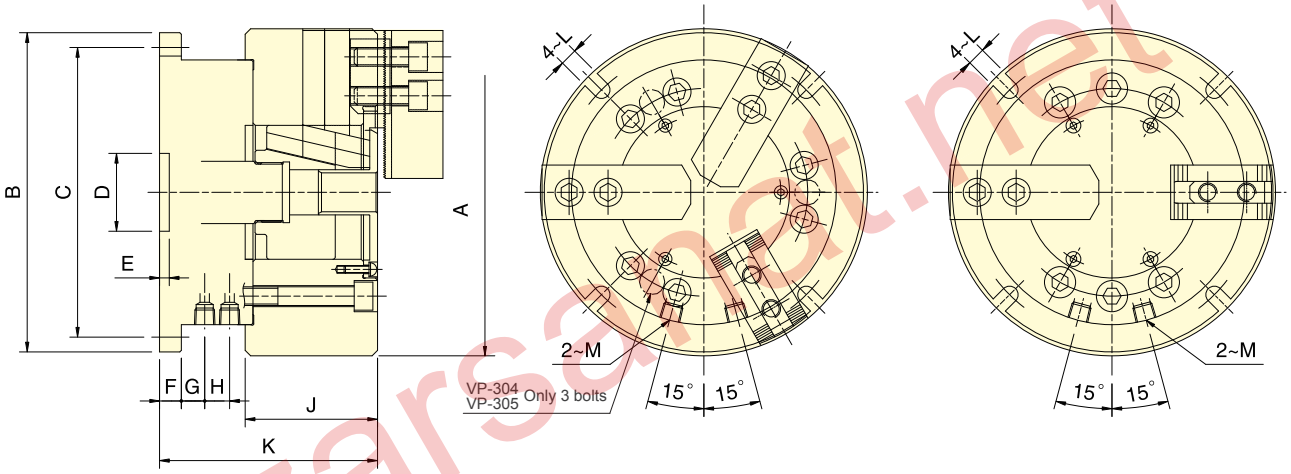

Subject to technical changes

SPECIFICATIONS

Model	Eff. Piston area		Jaw stroke(Dia.)	Max. pressure	Weight
	Extend	Retract			
	cm^2	cm^2	mm	MPa(kgf/cm^2)	kg
VP-204	28.0	24.9	6.4	2.1(21)	7.1
VP-304	28.0	24.9	6.4	3.2(32)	7.4
VP-205	28.0	24.9	6.4	2.2(22)	10.2
VP-305	28.0	24.9	6.4	3.3(33)	10.6
VP-206	63.1	53.5	8.5	2.3(23)	18.3
VP-306	63.1	53.5	8.5	3.4(34)	19.8
VP-208	103.4	90.8	8.8	1.9(19)	31.6
VP-308	103.4	90.8	8.8	2.8(28)	33.6
VP-210	153.1	133.5	8.8	1.5(15)	52.8
VP-310	153.1	133.5	8.8	2.2(22)	54.5

DIMENSIONS

Model	A	B	C	D(H8)	E	F	G	H	J	K	L	M
VP-204	110	146	130	30	4.5	12	18	2	52	92	9	RC1/4
VP-304	110	146	130	30	4.5	12	18	2	52	92	9	RC1/4
VP-205	135	146	130	30	4.5	12	18	2	55	95	9	RC1/4
VP-305	135	146	130	30	4.5	12	18	2	55	95	9	RC1/4
VP-206	165	178	160	40	5	12	14.5	12.5	74	125	11	RC1/4
VP-306	165	178	160	40	5	12	14.5	12.5	74	125	11	RC1/4
VP-208	210	205	186	40	5	14	15	16	85	140	11	RC1/4
VP-308	210	205	186	40	5	14	15	16	85	140	11	RC1/4
VP-210	254	248	225	50	6	17	20	18	89	176	13	RC3/8
VP-310	254	248	225	50	6	17	20	18	89	176	13	RC3/8

STATIONARY CHUCK

- Build-in hydraulic cylinder; it can also work with lock valve and be driven by air pressure.
- With small thru-hole and suits for long bar workpiece processing.
- Easy to install. Installing the tubes and then operating.
- Thin and compact design. Use standard soft jaws or standard hard jaws.
- Can work together with multi-plate.

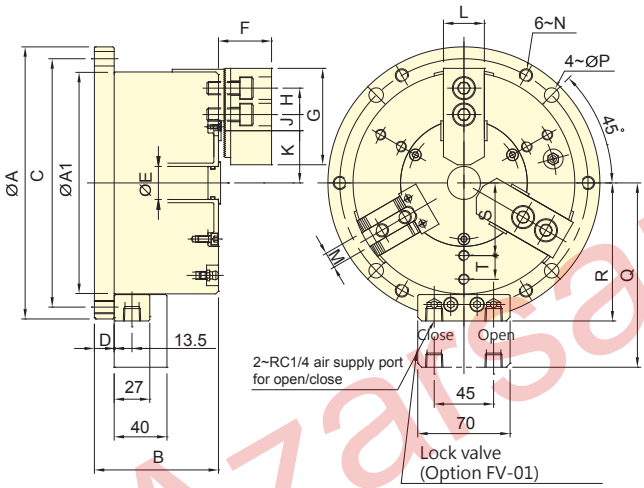

SP-306,308,310

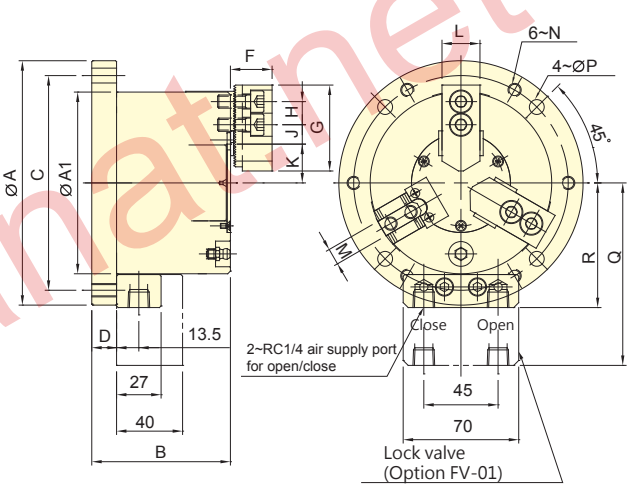

SP-304

Subject to technical changes

SPECIFICATIONS

Model	Jaw stroke (Dia.)	Chucking Dia.		Max. clamping force		Max. pressure		Min. pressure	Air consumption	Weight
		Max.	Min.	Pneumatic	Hydraulic	Pneumatic	Hydraulic			
	mm	mm	mm	kN(kgf)	kN(kgf)	MPa(kgf/cm²)	MPa(kgf/cm²)	kgf/cm²	lit (at 6.0 kgf/cm²)	kg
SP-304	5.1	110	10	7.5(765)	22.0(2243)	0.6(6)	1.3(13)	2	0.5	7
SP-306	5.5	168	30	21.0(2142)	52.0(5303)	0.6(6)	1.3(13)	2	1.4	16.5
SP-308	6.8	210	42	33.0(3365)	74.0(7546)	0.6(6)	1.3(13)	2	2.5	28.7
SP-310	7	254	52	48.0(4895)	107.0(10911)	0.6(6)	1.3(13)	2	4.2	42
SP-312	9.3	304	60	61.3(6246)	132.8(13532)	0.6(6)	1.3(13)	2	6.4	52.8

DIMENSIONS

Model	A(h7)	A1	B	C	D	E	F	G	H	J max.	J min.
SP-304	148	110	84	130	15	-	25.25	52	14	3.75	0.75
SP-306	206	168	94	188	15	25	40.25	73	20	10.75	4.75
SP-308	248	210	108	230	15	32	41.25	95	25	12.25	8.75
SP-310	300	254	112	280	16	54	46.25	110	30	23.25	12.75
SP-312	350	304	130	330	18	65	54	130	30	30.75	12.75

Model	K max.	K min.	L	M	N	P	Q	R	S	T
SP-304	31.5	28.95	23	10	M8x1.25	9	110.5	75.5	-	-
SP-306	47	44.25	31	12	M10x1.5	11	139.5	104.5	55	18
SP-308	57	53.6	35	14	M10x1.5	11	160.5	125.5	68	25
SP-310	64.5	61	40	16	M12x1.75	13	182.5	147.5	85	30
SP-312	77.5	72.85	50	21	M12x1.75	13	207.5	172.5	100	35

STATIONARY PULL BACK CHUCK

3-JAW / Non-Thru-Hole

- Build-in hydraulic cylinder; it can also work with lock valve and be driven by air pressure.
- Radial clamp and axial pull down at the same time, keep the workpiece attaching close to the base surface of the chuck.
- Almost no workpiece uplifting displacement.
- The body with heat treatment and the organization of cylinder pull-down and fine boring, which guarantee to the high clamping precision and durableness, it's suitable for heavy duty machining.
- Can work together with multi-plate.

■ Airtight pressure detect function is optional.

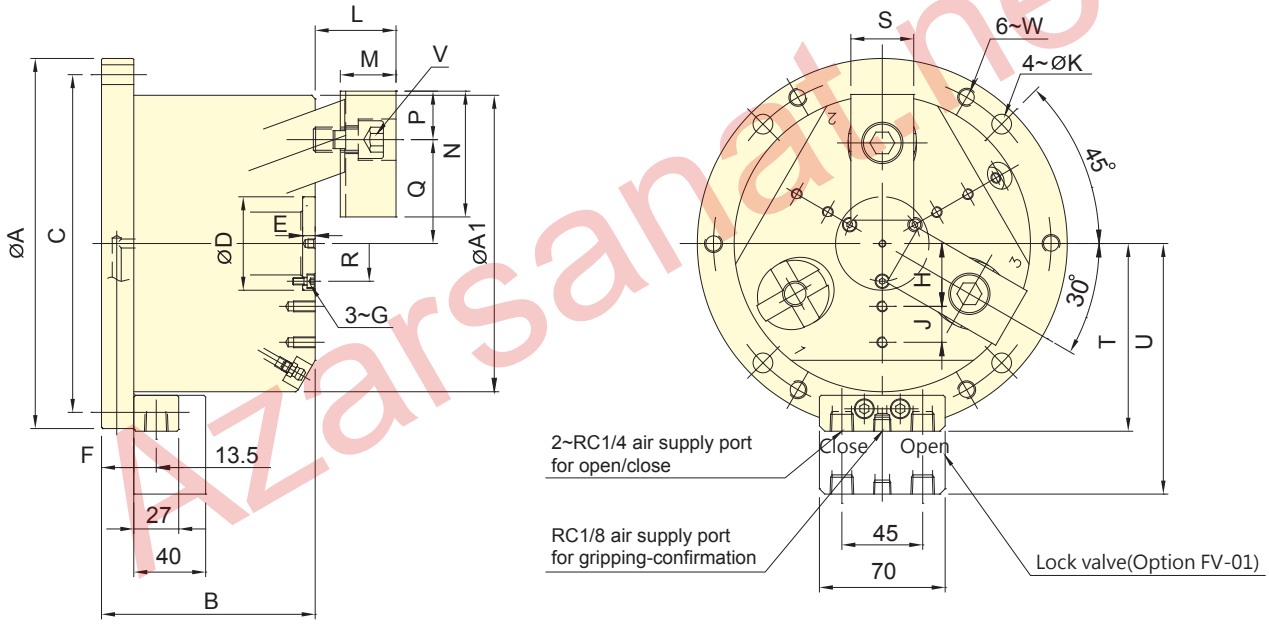

Subject to technical changes

SPECIFICATIONS

Model	Jaw stroke (Dia.)	Chucking Dia.		Max. clamping force		Max. pressure		Min. pressure	Air consumption	Weight
		Max.	Min.	Pneumatic	Hydraulic	Pneumatic	Hydraulic			
	mm	mm	mm	kN(kgf)	kN(kgf)	MPa(kgf/cm²)	MPa(kgf/cm²)	kgf/cm²	lit (at 6.0 kgf/cm²)	kg
SD-304	5	110	18	5.0(510)	10.9(1112)	0.6(6)	1.3(13)	2	0.26	8.1
SD-306	7.2	165	35	11.5(1173)	25.0(2550)	0.6(6)	1.3(13)	2	0.58	20.6
SD-308	7.2	210	28	21.7(2213)	47.0(4793)	0.6(6)	1.3(13)	2	1.02	34.1

DIMENSIONS

Model	A(h7)	A1	B	C	D(H7/h7)	E	F	G	H	J	K	L max.	L min.
SD-304	148	110	93.5	130	35	2	15	M3	22.5	10	9	30	23
SD-306	206	165	116	188	52	7	18	M4	35	20	11	45	35
SD-308	248	210	122	230	65	10	18	M5	45	25	11	56	46

Model	M	N	P	Q max.	Q min.	R	S	T	U	V	W
SD-304	19.5	52	19	37	34.5	27	25	75.5	110.5	3~M10	M8x1.25
SD-306	31	70	27	57.8	54.2	42	35	104.5	139.5	3~M14	M10x1.5
SD-308	41	84	31	70.8	67.2	53	40	125.5	160.5	6~M12	M10x1.5

STATIONARY PULL LOCK CHUCK

3-JAW / Non-Thru-Hole

- Build-in hydraulic cylinder; it can also work with lock valve and be driven by air pressure.
- Radial clamp and axial pull down at the same time, keep the workpiece attaching close to the base surface of the chuck.
- Almost no workpiece uplifting displacement.
- Suitable for drilling, milling and other machines.
- The body with heat treatment and the organization of cylinder pull-down and fine boring, which guarantee to the high clamping precision and durableness, it's suitable for heavy duty machining.
- Can work together with multi-plate.

■ Airtight pressure detect function is optional.

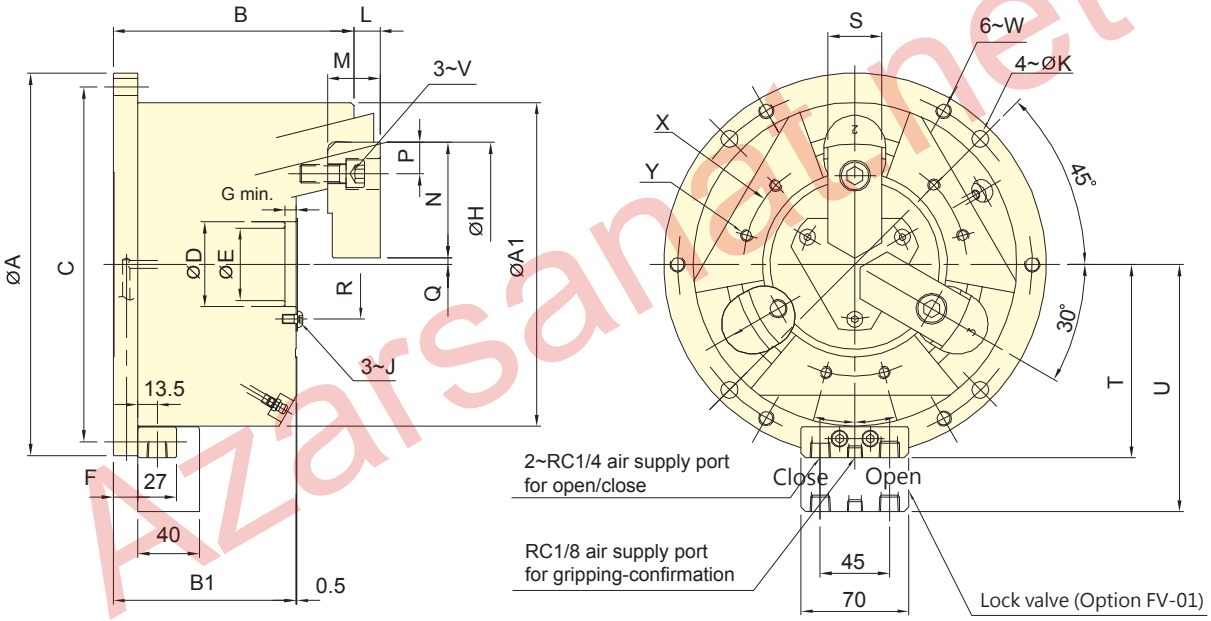

Subject to technical changes

SPECIFICATIONS

Model	Jaw stroke (Dia.)	Chucking Dia.		Max. clamping force		Max. pressure		Min. pressure	Air consumption	Weight
		Max.	Min.	Pneumatic	Hydraulic	Pneumatic	Hydraulic			
	mm	mm	mm	kN(kgf)	kN(kgf)	MPa(kgf/cm²)	MPa(kgf/cm²)	kgf/cm²	lit (at 6.0 kgf/cm²)	kg
SU-304	3	60	5	6.7(683)	16.0(1632)	0.6(6)	1.3(13)	2	0.26	7.4
SU-306	5	105	31	18.5(1886)	40.0(4079)	0.6(6)	1.3(13)	2	0.58	18.0
SU-308	5	132	32	37.0(3773)	80.0(8158)	0.6(6)	1.3(13)	2	1.02	31.5

DIMENSIONS

Model	A(h7)	A1	B	B1	C	D(H6)	E	F	G	H(H6)	J	K
SU-304	148	110	101.5	83.5	130	32	24	15	4.5	84	M5	9
SU-306	206	168	136.5	104	188	35	25	18	6	129	M5	11
SU-308	248	210	152	115	230	55	45	18	7	156	M6	11

Model	L max.	L min.	M	N	P	Q max.	Q min.	R	S	T	U	V	W	X (p.c.d)	Y
SU-304	7	1	17	40	9.5	2.75	1.25	42	20	75.5	110.5	M6	M8x1.25	62	6~M5x10
SU-306	15	5	30	50	17	15.75	13.25	49	30	104.5	139.5	M10	M10x1.5	72	6~M6x12
SU-308	17	7	34	63	20.5	16.25	13.75	71	35	125.5	160.5	M12	M10x1.5	95	6~M6x12

STATIONARY PULL BACK CHUCK FOR INTERNAL GRIPPING

- Build-in hydraulic cylinder; it can also work with lock valve and be driven by air pressure.
- For internal grapping.
- With high precision and stability.
- Suitable for the precision large length size process.
- Suitable for end process.
- Can work together with multi-plate.

■ Airtight pressure detect function is optional.

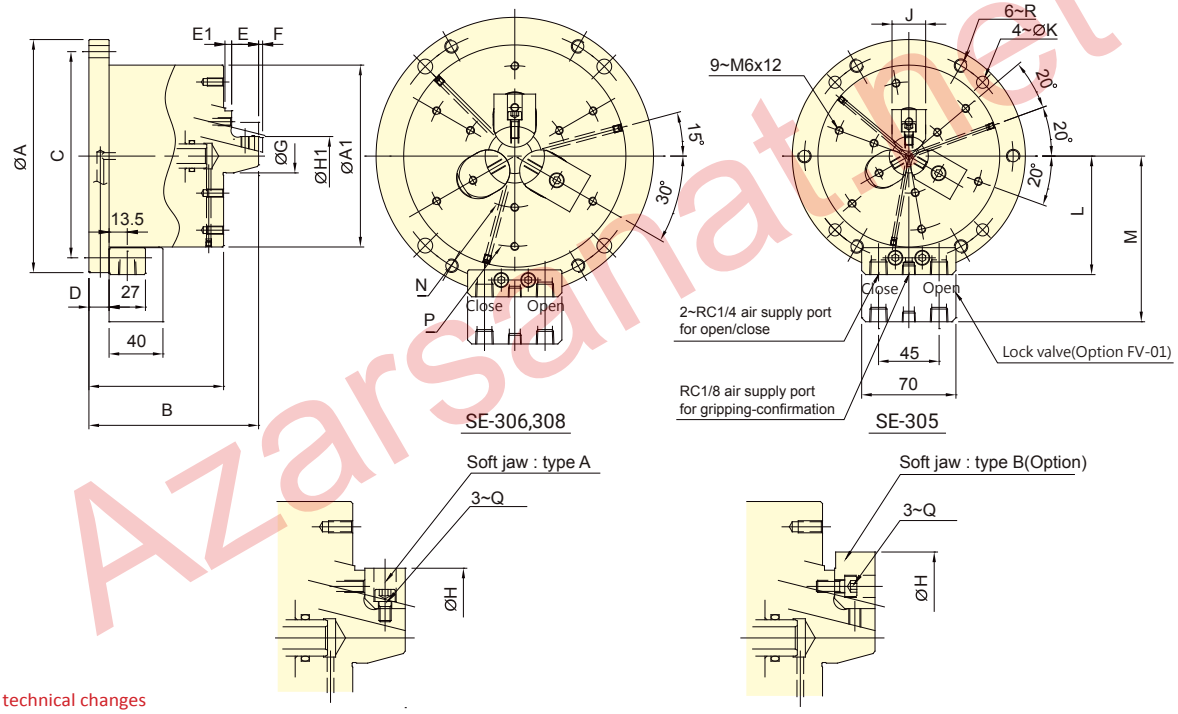

Subject to technical changes

SPECIFICATIONS

Model	Jaw stroke (Dia.)	Chucking Dia.		Max. clamping force		Max. pressure		Min. pressure	Air consumption	Weight
		Max.	Min.	Pneumatic	Hydraulic	Pneumatic	Hydraulic			
	mm	mm	mm	kN(kgf)	kN(kgf)	MPa(kgf/cm²)	MPa(kgf/cm²)	kgf/cm²	lit (at 6.0 kgf/cm²)	kg
SE-305	3	83	29	14.3(1459)	41.0(4181)	0.7(7)	1.3(13)	2	0.46	14.6
SE-306	5	110	44	20.0(2040)	57.0(5812)	0.7(7)	1.3(13)	2	0.58	20
SE-308	5	150	50	32.0(3263)	78.0(7954)	0.7(7)	1.3(13)	2	1.02	33

DIMENSIONS

Model	A(h7)	A1	B	B1	C	D	E	E1	F max.	F min.	G	type A		type B	
												H max.	H min.	H max.	H min.
SE-305	173	135	126	100	155	15	20	5	3	-3	25	68	50	83	67
SE-306	206	168	140	108	188	18	23	7	5	-5	40	90	70	110	89
SE-308	248	210	164	119	230	18	30	9	5	-5	49	110	90	150	108

Model	H1		J	K	L	M	N	P	Q	R
	max.	min.								
SE-305	50	29	25	9	88	123	55	110	3~M6	M8x1.25
SE-306	70	44	31	11	104.5	139.5	76	134	3~M6	M10x1.5
SE-308	90	50	35	11	125.5	160.5	100	170	3~M8	M10x1.5

STATIONARY CHUCK BASE PLATE

- Use for milling machine or machining center to achieve simultaneous processing of multiple workpieces.
- Stationary cylinder lock valve (option) can be mounted.
- Plate for 2,3,6 stationary chucks is an option.

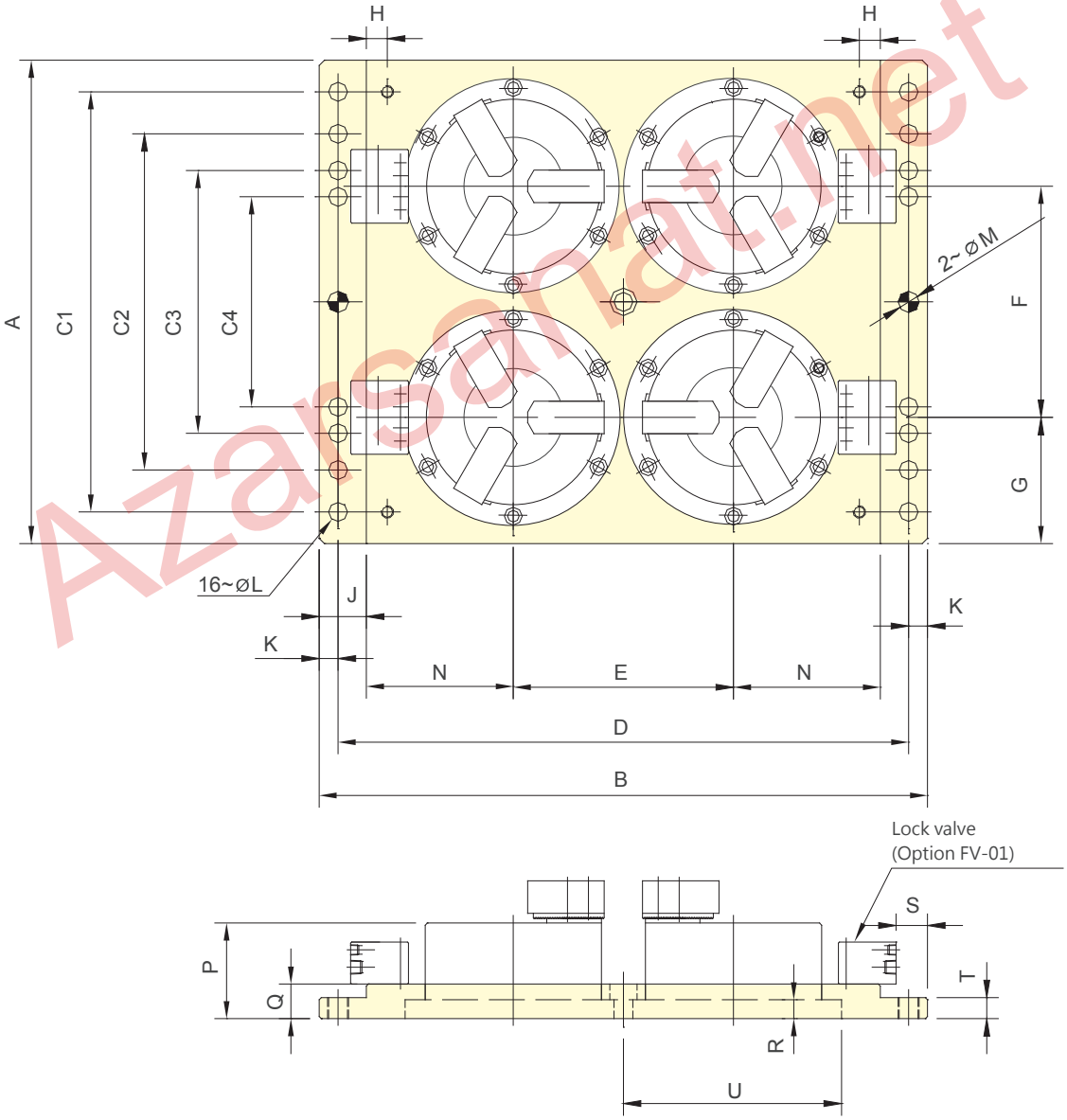

Subject to technical changes

DIMENSIONS

Model	A	B	C1	C2	C3	C4	D	E	F	G
MP4-06206	460	580	400	320	250	200	544	210	220	120

Model	H	J	K	L	M	N	P	Q	R	S	T	U
MP4-06206	20	45	18	17	20	140	*B	33	18	20	20	206

The dimension *B: Please refer to the dimension B of the chuck model assembled.

SYNCHRONOUS CLAMP

Crank Type

- CRANK type 2-jaw synchronous clamp with long jaw stroke.
- Matching surfaces of all parts hardened, ground and lubricated directly.
- High rigidity and high clamping accuracy.

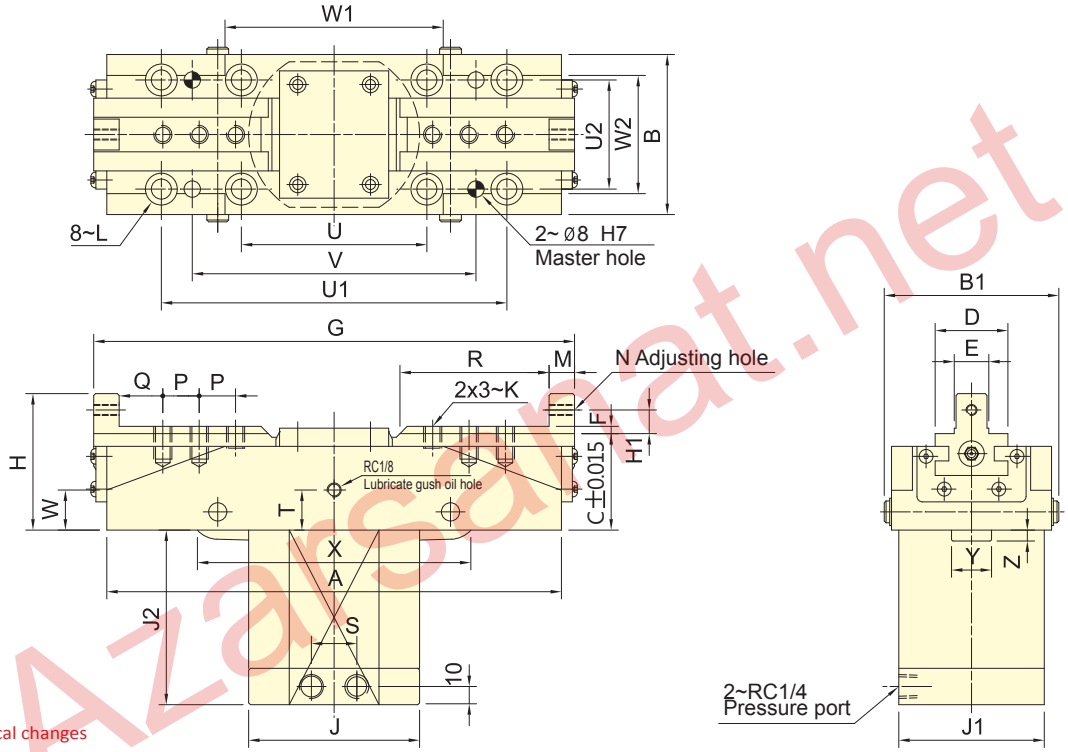

Subject to technical changes

SPECIFICATIONS

Model	Eff. Piston area		Jaw stroke(Dia.)	Clamping capacity	Max. clamping force	Max. pressure	Weight
	Extend	Retract					
	cm^2	cm^2	mm	mm	kN (kgf)	MPa(kgf/cm^2)	kg
CP-20	28.27	25.13	20	150	14.4(1465)	3.5(35)	9.5
CP-30A	28.27	25.13	30	180	14.4(1465)	3.5(35)	11
CP-30	28.27	25.13	30	210	14.4(1465)	3.5(35)	12
CP-40	28.27	25.13	40	200	14.4(1465)	3.5(35)	12
CP-50	38.48	33.57	50	215	17.7(1812)	3.5(35)	18.5
CP-70	50.26	45.35	70	235	23.9(2434)	3.5(35)	30

DIMENSIONS

Model	A	B	B1	C	D	E(h6)	F	G max.	Gmin	H	H1	J	J1	J2	K	L	M
CP-20	215	88	96	53	40	18	4	249	229	75	13	94	76	83.5	M10x1.5	M10	12
CP-30A	250	88	96	53	40	18	4	295	265	75	13	94	76	96	M10x1.5	M10	14
CP-30	280	88	96	53	40	22	4	327	297	75	13	94	76	96	M12x1.75	M10	14
CP-40	270	88	96	53	40	22	4	331	291	75	13	94	76	110	M12x1.75	M10	14
CP-50	300	110	115	65	50	28	5	369	319	90	15	105	105	120	M12x1.75	M10	16
CP-70	346	120	126	89	55	32	5	430	360	114	15	115	115	146	M14x2	M12	16

Model	N	P	Q	R	S	T	U	U1	U2	V	W	W1	W2	X	Y	Z
CP-20	M6x1	18	20	66	24	22	102	190	60	156	32	110	65	150	22	4
CP-30A	M6x1	20	24	96	24	22	102	190	60	156	20	120	65	156	22	6
CP-30	M6x1	20	24	98	24	22	102	190	60	156	23	110	65	156	22	6
CP-40	M6x1	20	24	98	24	22	102	190	60	156	25	110	65	150	22	10.5
CP-50	M8x1.25	21	28	102	30	32	105	230	85	195	29	140	80	180	30	10
CP-70	M8x1.25	23	28	112	30	52	120	275	95	240	42	155	90	210	34	23.5

SINGLE-SLIDE FACING HEAD(I)

- Feed mechanism is transmitted by Wedge Plunger with steady feed speed. Simple adjustment for feed speed and stroke.
- Matching surfaces of all parts hardened, grounding and lubricated directly. With rigidity and durability.
- Stopper accurancy: ±0.03mm.

- Suitable for using with RS type cylinder.
- For precision processes, Wedge Plunger type facing heads are suitable for using with electro servo and ball screw mechanism.

WEDGE PLUNGER

FA-408

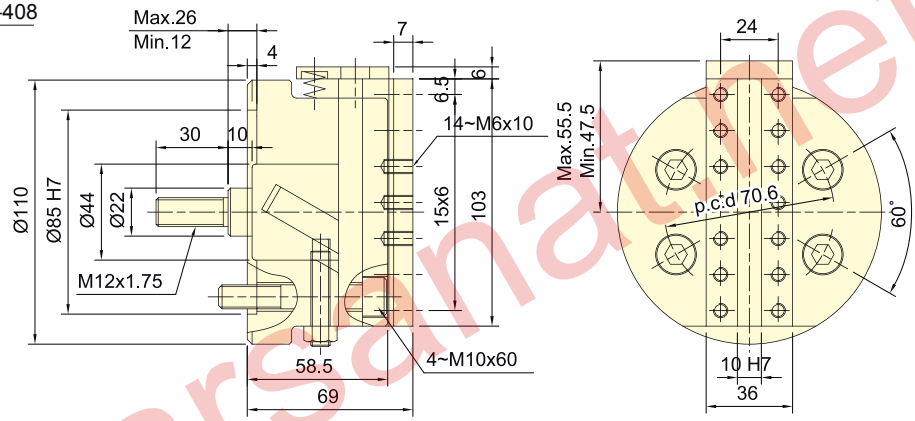

WEDGE PLUNGER

FA-610 FA-812

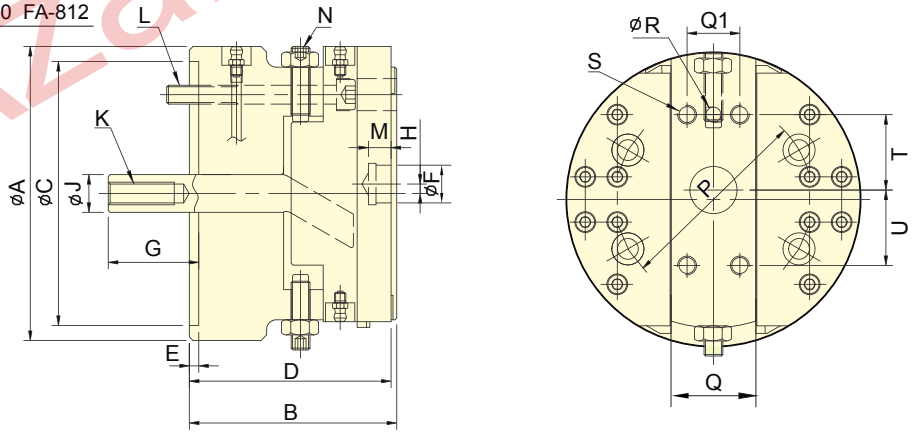

Subject to technical changes

SPECIFICATIONS

Model	Plunger stroke	Slider stroke	Max. speed	Max. feed speed	Weight	Matching cylinder	Max. pressure
	mm	mm	min^{-1}(r.p.m.)	mm/min.	kg		MPa(kgf/cm^2)
FA-408	14	8	1600	400	4.2	RS-6520N	1.0(10)

Model	Plunger stroke	Slider stroke	Max. speed	Max. D.B. PULL	I Moment of inertia	Weight	Matching cylinder
	mm	mm	min^{-1}(r.p.m.)	kN(kgf)	kg·m^2	kg	
FA-610	18	10	1200	280	0.04	14.5	RS-6520N
FA-812	21	12	800	450	0.14	28.5	RS-6530N

DIMENSIONS

Model	A	B	C H7	D	E	F H7	G max.	G min.	H	J	K	L	M	N	P	Q	Q1	R H8	S	T	U
FA-610	156	110	140	107	5	20	66	48	±5	20	M12x1.75	4-M10x90	12	2-M10x45	104.8	45	28	8	4-M10x16	40	40
FA-812	198	130	170	127	5	25	84	63	±6	25	M16x2.0	4-M12x105	12	2-M12x60	133.4	54	32	10	4-M10x16	50	50

SINGLE-SLIDE FACING HEAD(II)

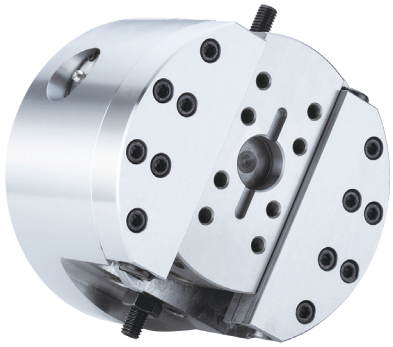

- Feed mechanism is transmitted by Rack and Pinion with steady feed speed. Simple adjustment for feed speed and stroke.
- Matching surfaces of all parts hardened, grounding and lubricated directly. With rigidity and durability.
- Stopper accurancy: ±0.03mm, work with stoper screw.

- Suitable for using with RS type cylinder.
- For precision processes, Wedge Plunger type facing heads are suitable for using with electro servo and ball screw mechanism.

RACK AND PINION
FA-615 FA-830 FA-1570

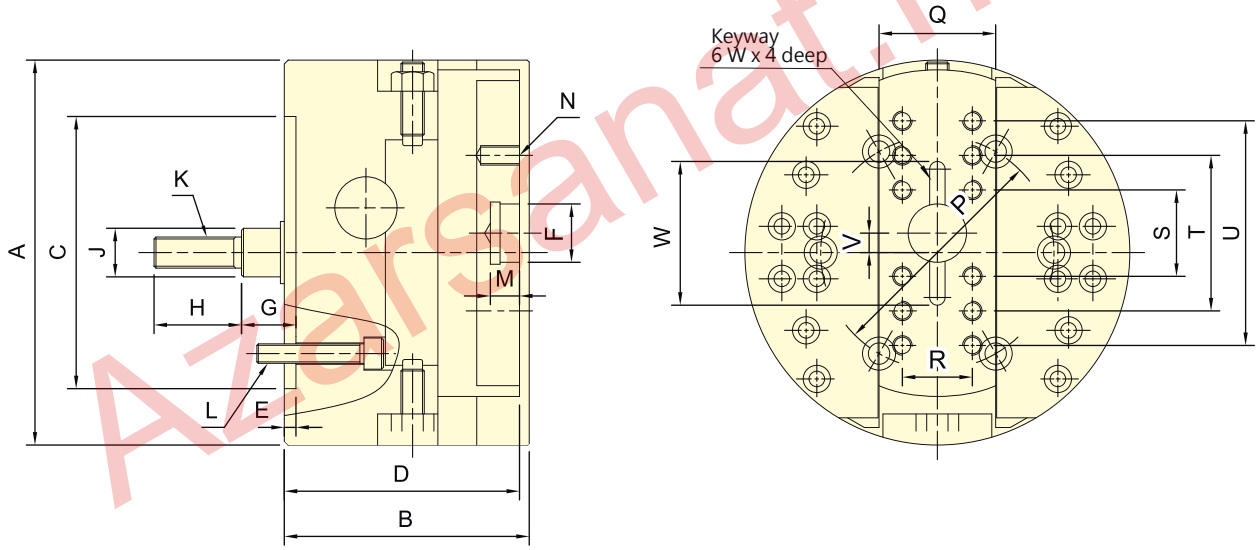

Subject to technical changes

SPECIFICATIONS

Model	Plunger stroke	Slider stroke	Max. speed	Max. feed speed	Weight	Matching cylinder	Max. pressure
	mm	mm	min^{-1}(r.p.m.)	mm/min.	kg		MPa(kgf/cm^2)
FA-615	15	15	1200	300	11.9	RS-6520N	1.2(12)
FA-830	30	30	800	240	23.9	RS-6530N	1.8(18)
FA-1570	70	70	500	120	167	RS-1080N	2.6(26)

DIMENSIONS

Model	A	B	C (H7)	D	E	F (H7)	G max.	G min.	H	J	K
FA-615	150	107	110	102	5	25	40	25	35	20	M12x1.75
FA-830	198	126	140	121	6	30	54	24	45	25	M16x2
FA-1570	400	200	300	192	6	60	110	40	75	50	M30x3.5

Model	L	M	N	P	Q	R	S	T	U	V	W
FA-615	3-M10x40	12	8-M8x16	82.6	50	32	32	68	-	±7.5	56
FA-830	6-M10x55	15	12-M10x20	120	60	36	40	80	120	±15	66
FA-1570	6-M20x90	15	8-M16x20	235	120	80	130	260	-	±17.5	-

DOUBLE-SLIDE FACING HEAD

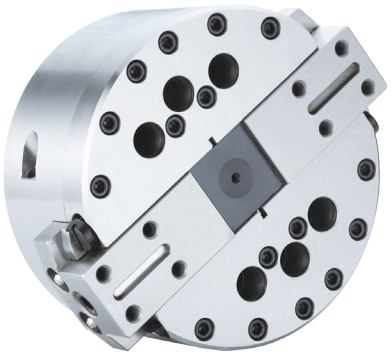

- Feed mechanism is transmitted by Crank type with steady feed speed. Simple adjustment for feed speed and stroke.
- Matching surfaces of all parts hardened, grounding and lubricated directly. With rigidity and durability.
- Stopper accurancy: ±0.03mm, work with stoper screw.

- Suitable for using with RS type cylinder.
- For precision processes, Helical Gear Rack type facing heads are suitable for using with electro servo and ball screw mechanism.

CRANK TYPE

FD-632 FD-840 FD-1060

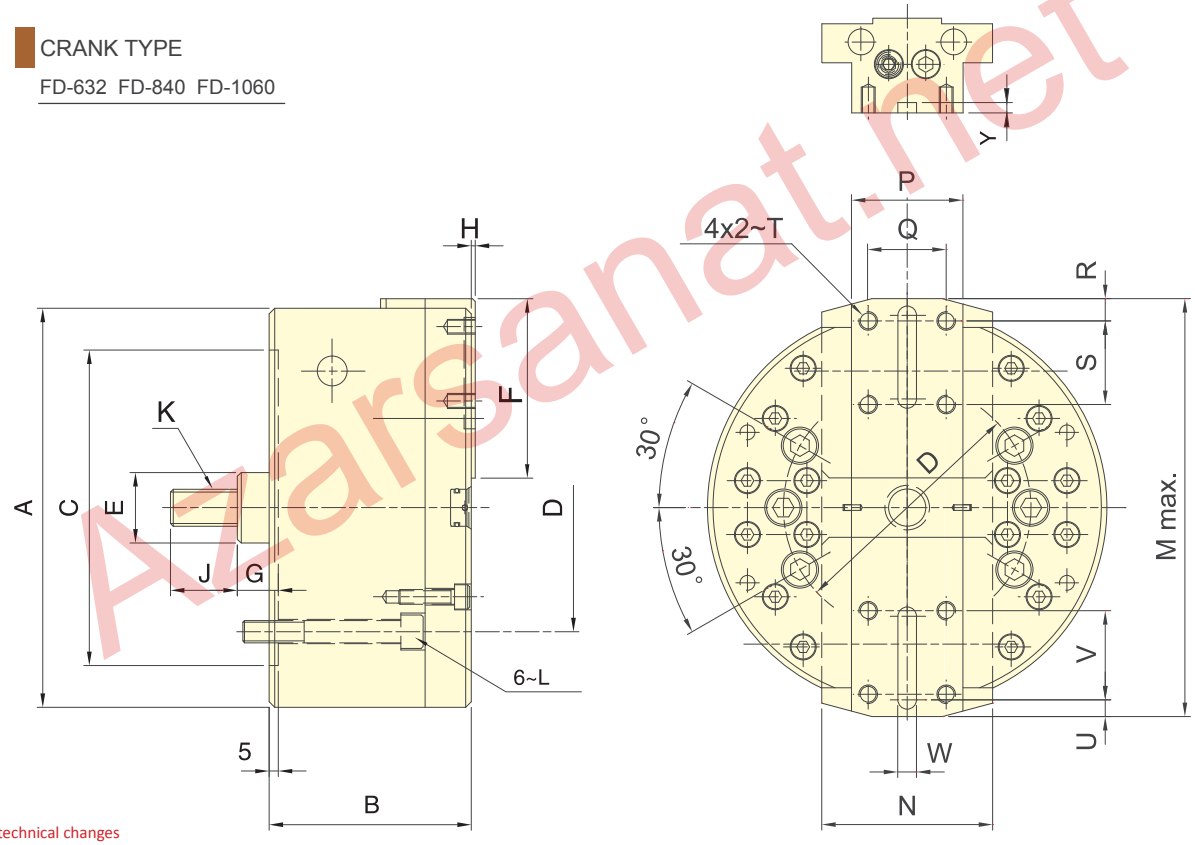

Subject to technical changes

SPECIFICATIONS

Model	Plunger stroke	Slider stroke(Dia.)	Max. speed	Max. feed speed	Weight	Matching cylinder	Max. pressure
	mm	mm	min^{-1}(r.p.m.)	mm/min.	kg		MPa(kgf/cm^2)
FD-632	20	32	3200	300	13.6	RS-1030N	2.4(24)
FD-840	25	40	2500	240	30.0	RS-1030N	3.0(30)
FD-1060	35	60	1800	200	41.5	RS-1040N	3.0(30)

DIMENSIONS

Model	A	B	C(H7)	D	E	F	G max.	G Min.	H	J	K
FD-632	168	93	140	104.8	32	76	31	11	2	36	M16x2.0
FD-840	215	109	170	133.4	38	96.5	32.5	7.5	2	36	M20x2.5
FD-1060	254	123	220	171.4	38	110.5	32.5	-2.5	4	36	M20x2.5

Model	L	M	N	P	Q	R	S	T	U	V	W(H8)	Y
FD-632	6~M10x75	188	70	40	25	10	32	M8x15	10	32	6	4
FD-840	6~M12x85	238	92	60	42	12	45	M10x15	12	45	10	6
FD-1060	6~M16x125	286	90	65	46	15	50	M10x15	12	50	10	6

SHORT TYPE ROTATING HYDRAULIC CYLINDER WITH THRU-HOLE AND SAFETY DEVICE(I)

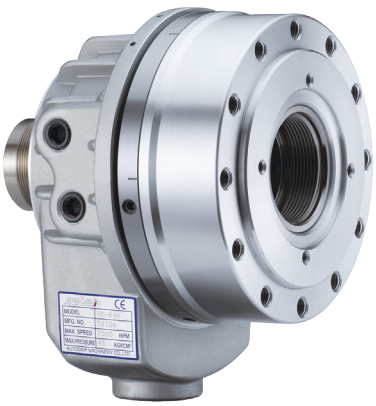

- Super short form, light weight large Through-Hole, just as 2/3 of typical model length.
- Built-in safety check valves and pressure relief valves.
- Can screw it from the rear end of the cylinder when mounting.

■ Patent numbers :
Taiwan : PAT.NO.M491534
China : PAT.NO.ZL201420584274.5

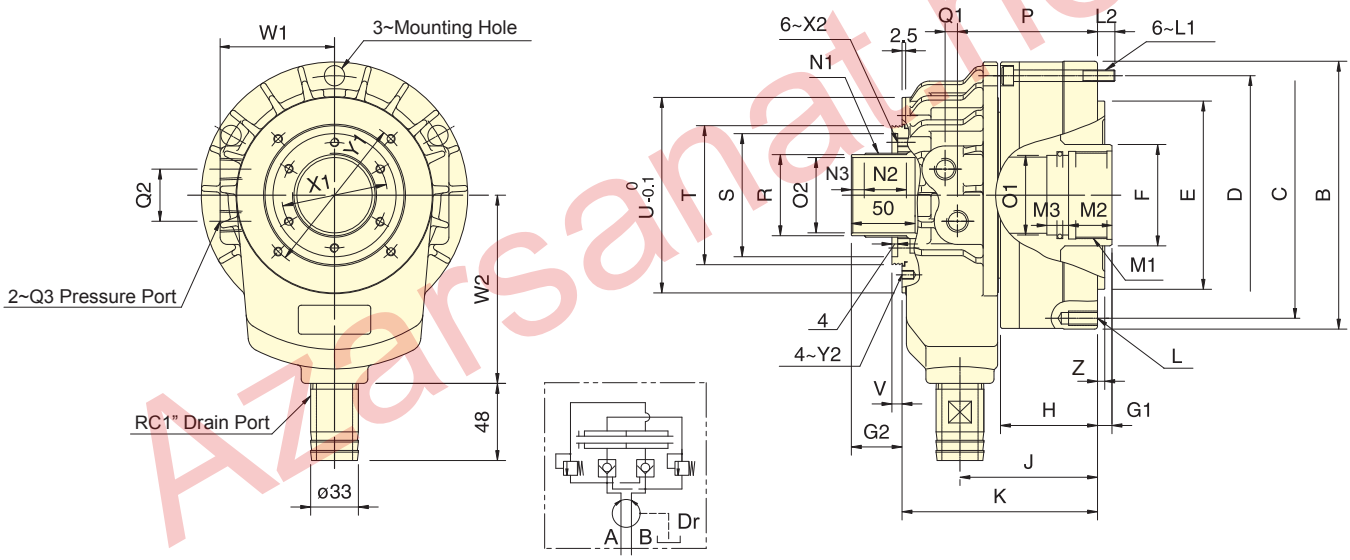

ROTARY CYLINDERS

Subject to technical changes

SPECIFICATIONS

Model	Eff. piston area		Piston stroke	Max. speed	Max. pressure	I	Weight	Total oil leakage
	Extend	Retract				Moment of inertia		
	cm²	cm²	mm	min⁻¹(r.p.m.)	MPa(kgf/cm²)	kg·m²	kg	lit. / min.
TK-A528	73.0	69.7	12	8000	4.5 (45)	0.012	6.2	3.0
TK-A533	73.0	69.7	12	8000	4.5 (45)	0.012	6.0	3.0
TK-C643	99.1	88.0	15	7000	4.5 (45)	0.018	7.5	3.0
TK-A646	105.0	93.9	15	7000	4.5 (45)	0.018	7.3	3.0
TK-B646	105.0	93.9	15	7000	4.5 (45)	0.018	8.6	3.0
TK-C646	99.1	88.0	15	7000	4.5 (45)	0.018	7.5	3.0
TK-B846	135.3	125.0	20	6300	4.5 (45)	0.032	12.4	3.9
TK-A853	135.3	125.0	20	6300	4.5 (45)	0.032	11.8	3.9
TK-B853	135.3	125.0	20	6300	4.5(45)	0.032	11.7	3.9
TK-1068	165.9	149.9	25	5500	4.5 (45)	0.065	17.8	4.2
TK-A1075	170.0	155.0	25	5500	4.5(45)	0.065	18.8	4.2
TK-A1078	170.1	155.3	25	5500	4.5 (45)	0.065	17.4	4.2

DIMENSIONS

Model	A	B	C	D	E	F	G1		G2		H	J	K	L	L1	L2	M1	M2	M3
	I.D.				h7		max.	min.	max.	min.									
TK-A528	105	141	125	125	110	45	12	0	38	26	49	77.5	123	6~M8x20	M8x55	14	M38x1.5	25	13
TK-A533	105	141	125	125	110	45	12	0	38	26	49	77.5	123	6~M10x20	M8x55	14	M38x1.5	25	13
TK-C643	128	156	140	140	120	65	15	0	44	29	56	85	125	12~M10x20	M8x60	12	M50x2	25	13
TK-A646	128	162	147	147	130	65	15	0	44	29	56	85	125	12~M10x20	M8x60	12	M55x2	25	13
TK-B646	128	162	130	147	100	65	15	0	44	29	66	95	135	12~M10x20	M8x70	12	M55x2	25	13
TK-C646	125	156	140	140	120	65	15	0	44	29	56	85	125	12~M10x20	M8x60	12	M55x2	25	13
TK-B846	145	185	170	165	130	70	20	0	48	28	66	95	135	12~M10x20	M8x70	12	M55x2	30	15
TK-A853	145	185	170	165	140	70	20	0	48	28	66	95	135	12~M10x20	M8x70	12	M60x2	30	15
TK-B853	145	185	170	165	130	70	20	0	48	28	66	95	135	12~M10x20	M8x70	12	M60x2	30	15
TK-1068	170	212	190	190	160	98	25	0	50	25	73	107	157	12~M10x20	M10x80	17	M75x2	35	15
TK-A1075	170	212	190	190	160	95	25	0	50	25	74	108	158	12~M10x20	M10x80	16	M85x2	35	15
TK-A1078	170	212	190	190	160	95	25	0	50	25	74	108	158	12~M10x20	M10x80	16	M87x2	35	15

Model	N1	N2	N3	O1	O2	P	Q1	Q2	Q3	R	S	T	U	V	W1	W2	X1	X2	Y1	Y2	Z
				H8	H8					g7	H7										
TK-A528	M39x1.5	25	8	35	28	79	8.5	30	RC1/4	37	62	70	98	6	62	110	49	M6x6	83	M5x6	5
TK-A533	M39x1.5	25	8	35	33	79	8.5	30	RC1/4	37	62	70	98	6	62	110	49	M6x6	83	M5x6	5
TK-C643	M52x1.5	29	9	45	43	87	8.5	36	RC3/8	50	76	85	116	6	74	120	64	M6x6	98	M5x6	5
TK-A646	M52x1.5	29	9	50	46	87	8.5	36	RC3/8	50	76	85	116	6	74	120	64	M6x6	98	M5x6	5
TK-B646	M52x1.5	29	9	50	46	97	8.5	36	RC3/8	50	76	85	116	6	74	120	64	M6x6	98	M5x6	5
TK-C646	M52x1.5	29	9	50	46	87	8.5	36	RC3/8	50	76	85	116	6	74	120	64	M6x6	98	M5x6	5
TK-B846	M58x1.5	30	8	50	46	97	8.5	36	RC3/8	56	85	96	128	7	79	130	73	M6x7	110	M6x6	5
TK-A853	M58x1.5	30	8	55	53	97	8.5	36	RC3/8	56	85	96	128	7	79	130	73	M6x7	110	M6x6	5
TK-B853	M58x1.5	30	8	55	53	97	8.5	36	RC3/8	56	85	96	128	7	79	130	73	M6x7	110	M6x6	5
TK-1068	M84x2	33	9	70	68	109	12	40	RC1/2	81	108	121	164	7	98	160	98	M6x8	155	M6x8	5
TK-A1075	M84x2	33	9	80	75	110	12	40	RC1/2	81	108	121	164	7	98	160	98	M6x8	155	M6x8	5
TK-A1078	M84x2	33	9	82	78	110	12	40	RC1/2	81	108	121	164	7	98	160	98	M6x8	155	M6x8	5

SHORT TYPE ROTATING HYDRAULIC CYLINDER WITH THRU-HOLE AND SAFETY DEVICE(II)

- Super short form, light weight large Through-Hole, just as 2/3 of typical model length.
- Built-in safety check valves and pressure relief valves.
- Can screw it from the rear end of the cylinder when mounting.

■ Patent numbers :
Taiwan : PAT.NO.M491534
China : PAT.NO.ZL201420584274.5

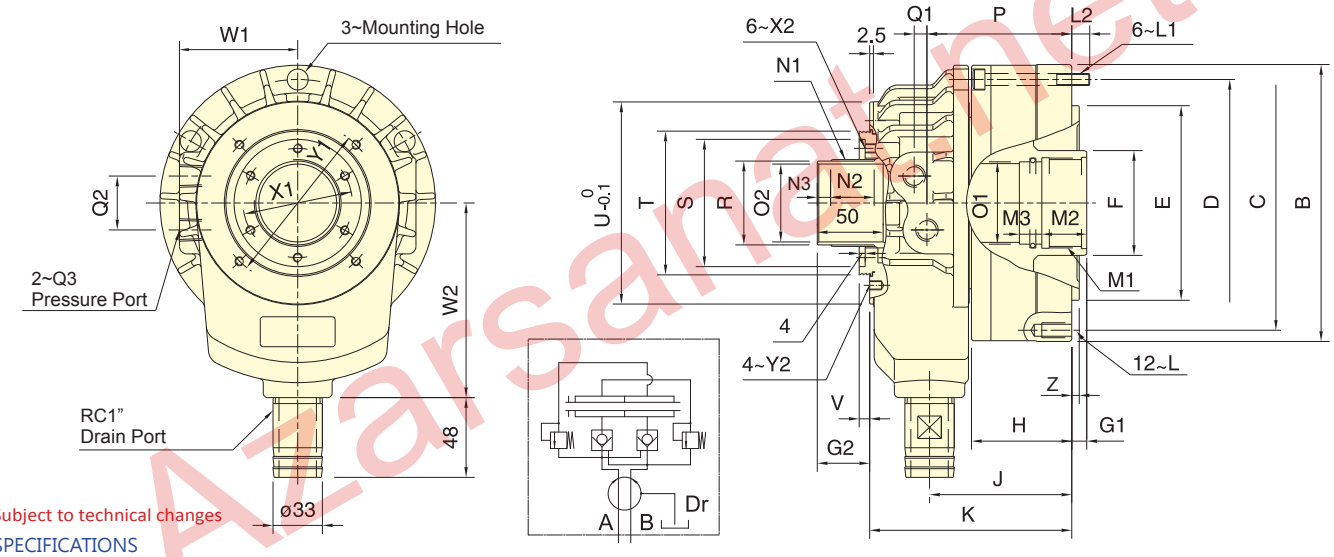

Subject to technical changes

SPECIFICATIONS

Model	Eff. piston area		Piston stroke	Max. speed	Max. pressure	I	Weight	Total oil leakage
	Extend	Retract				Moment of inertia		
	cm^2	cm^2	mm	min^{-1}(r.p.m.)	MPa(kgf/cm^2)	kg·m^2	kg	lit. / min.
TK-A1287	234.0	217.5	30	3800	4.0 (40)	0.092	24.8	4.5
TK-A1291	234.0	217.5	30	3800	4.0 (40)	0.092	24.8	4.5
TK-A1511	336.4	315.2	30	3000	3.5(35)	0.38	57.9	7.0
TK-A1512	336.4	315.2	30	3000	3.5(35)	0.38	53.8	7.0
TK-2114	373.2	336.1	35	2500	3.0 (30)	0.54	58.2	8.0

DIMENSIONS

Model	A	B	C	D	E	F	G1		G2		H	J	K	L	L1	L2	M1	M2	M3
	I.D.				h7		max.	min.	max.	min.									
TK-A1287	200	245	215	225	180	110	30	0	59	29	86	126	184	12~M12x24	M10x90	14.5	M95x2	35	15
TK-A1291	200	245	215	225	180	110	30	0	59	29	86	126	184	12~M12x24	M10x90	14.5	M100x2	35	15
TK-A1511	250	300	275	275	230	140	30	0	58	28	102	156	226	12~M16x36	M12x110	21	M120x2	45	15
TK-A1512	250	300	275	275	230	140	30	0	58	28	102	156	226	12~M16x36	M12x110	21	M130x2	45	15
TK-2114	265	320	295	295	240	165	35	0	60	25	115	173.5	247.5	12~M16x32	M12x120	17.5	M155x2	45	20

Model	N1	N2	N3	O1	O2	P	Q1	Q2	Q3	R	S	T	U	V	W1	W2	X1	X2	Y1	Y2	Z
				H8	H8					g7	H7										
TK-A1287	M99x2	38	9	90	87	127.5	15	45	RC1/2	96	120	138	180	7	110	185	108	M6x10	165	M6x10	5
TK-A1291	M99x2	38	9	95	91	127.5	15	45	RC1/2	96	120	138	180	7	110	185	108	M6x10	165	M6x10	5
TK-A1511	M129x2	38	9	115	110	153.75	17	50	RC1/2	126	150	170	227	7	134	210	138	M6x10	210	M6x9	6
TK-A1512	M129x2	38	9	125	120	153.75	17	50	RC1/2	126	150	170	227	7	134	210	138	M6x10	210	M6x9	6
TK-2114	M149x2	38	9	145	140	170	17	50	RC1/2	146	170	190	250	7	145	210	160	M6x10	230	M6x10	6

SHORT TYPE ROTATING HYDRAULIC CYLINDER WITH THRU-HOLE AND SAFETY DEVICE(III)

- New design, short form, light weight large through-hole.
- Built-in safety check valves and pressure relief valves.

- Patent numbers :
  Taiwan : PAT.NO.M491534
  China : PAT.NO.ZL201420584274.5

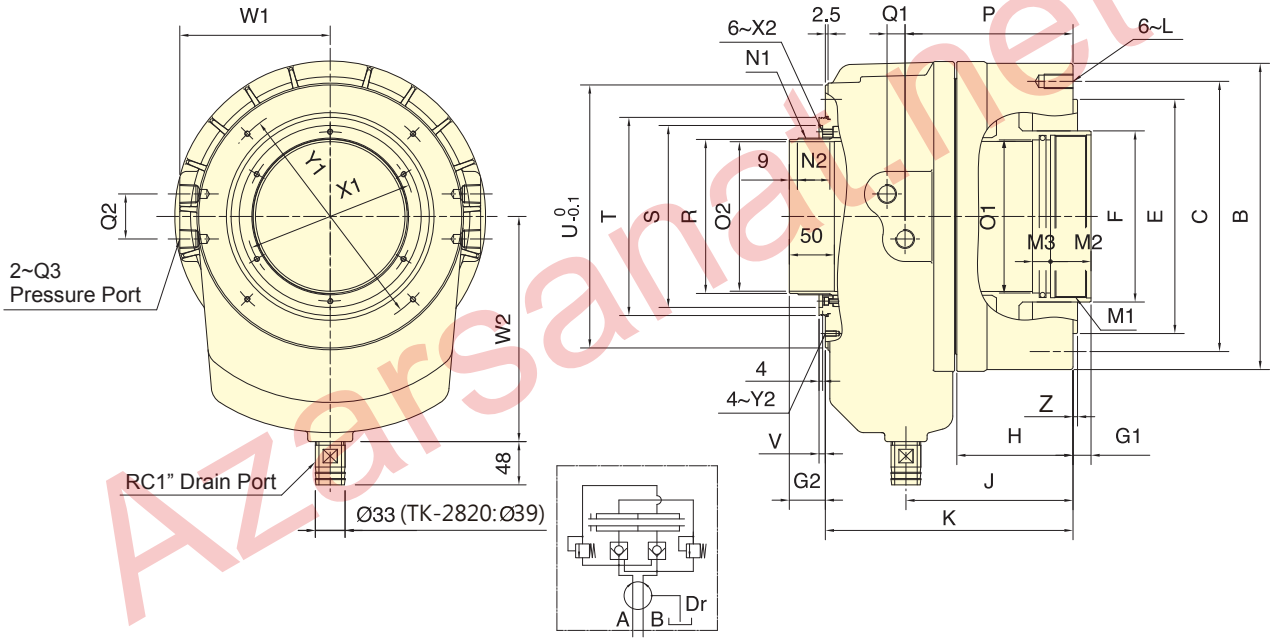

Subject to technical changes

SPECIFICATIONS

Model	Eff. piston area		Piston stroke	Max. speed	Max. pressure	I	Weight	Total oil leakage
	Extend	Retract				Moment of inertia		
	cm^2	cm^2	mm	min^{-1}(r.p.m.)	MPa(kgf/cm^2)	kg·m^2	kg	lit. / min.
TK-2416	418.4	375.4	35	2000	3.0 (30)	1.12	78.0	9.0
TK-2416L	418.4	375.4	51	2000	3.0 (30)	1.31	79.2	9.0
TK-2820	526.2	472.6	51	1600	3.0 (30)	2.4	134.0	10.0

DIMENSIONS

Model	A	B	C	E	F	G1		G2		H	J	K	L	M1	M2	M3	N1	N2
	I.D.			h7		max.	min.	max.	min.									
TK-2416	290	340	300	260	190	35	0	60	25	129	185.5	275	M16x32	M180x3	45	20	M174x2	38
TK-2416L	290	340	300	260	190	51	0	76	25	145	201.5	291	M16x32	M180x3	45	20	M174x2	52
TK-2820	340	395	360	320	235	51	0	76	25	152	212.5	316	M20x40	M220x3	45	20	M218x2	52

Model	O1	O2	P	Q1	Q2	Q3	R	S	T	U	V	W1	W2	X1	X2	Y1	Y2	Z
	H8	H8					g7	H7										
TK-2416	170	166	186.5	20	50	RC1/2	171	202	220	292	7	167	250	188	M6x11	260	M6x12	5
TK-2416L	170	166	202.5	20	50	RC1/2	171	202	220	292	7	167	250	188	M6x11	260	M6x12	6
TK-2820	210	205	216	21	50	RC1/2	215	262	285	360	7	202.5	300	240	M6x12	320	M6x12	6

SHORT TYPE ROTARY HYDRAULIC CYLINDER WITH BIG-BORE THRU-HOLE AND SAFETY DEVICE

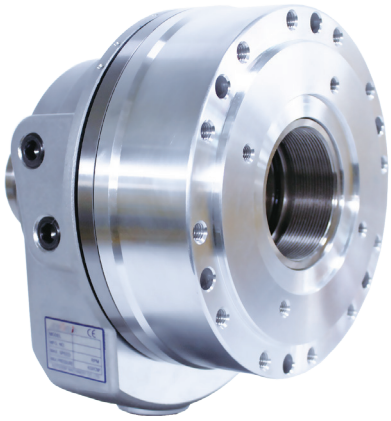

- Bigger bore through-hole design.
- Super short form, light weighted.
- Built-in safety check valves and pressure relief valves.
- Front / Rear end mounting.

- Diameter of coolant collector's drain port is optional.
  Default : Ø33 ; optional : Ø40, Ø60.

- Patent numbers :
  Taiwan : PAT.NO.M491534
  China : PAT.NO.ZL201420584274.5

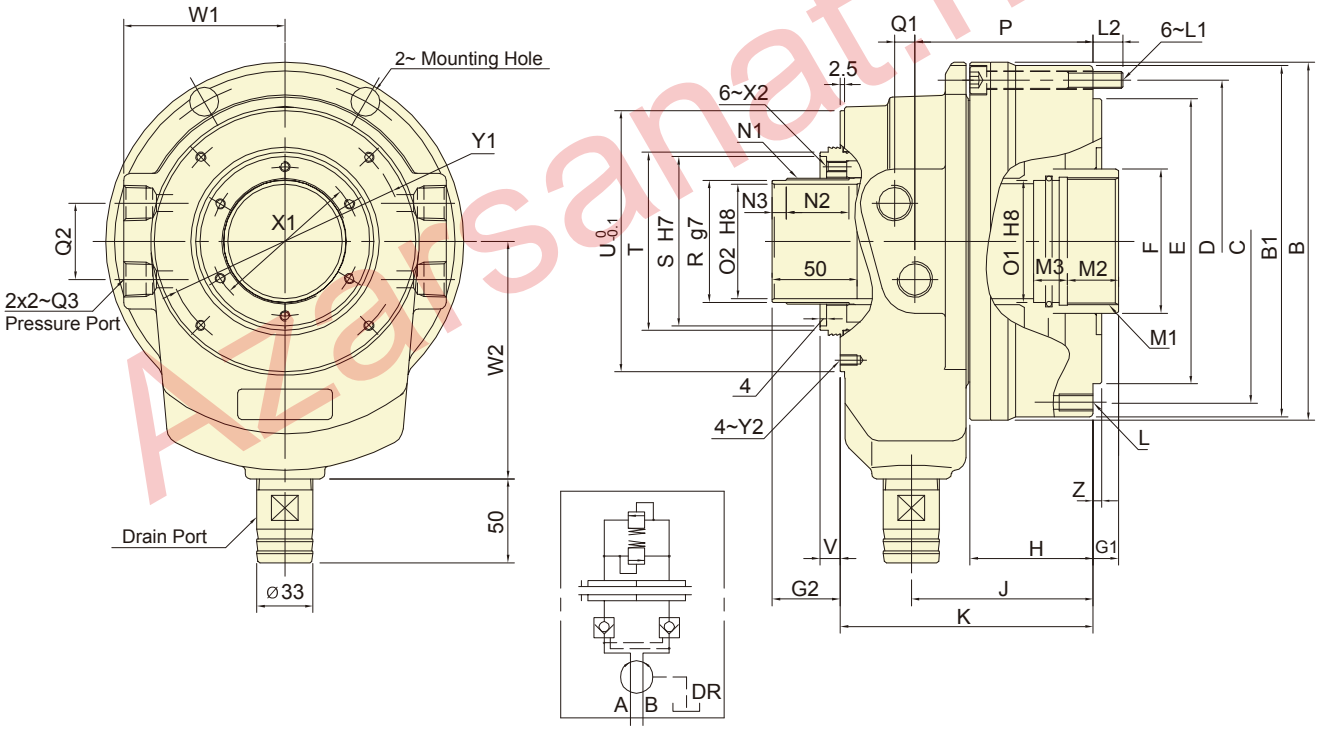

Subject to technical changes

SPECIFICATIONS

Model	Eff. piston area		Piston stroke	Max. speed	Max. pressure	I	Weight	Total oil leakage
	Extend	Retract				Moment of inertia		
	cm^2	cm^2	mm	min^{-1}(r.p.m.)	MPa(kgf/cm^2)	$kg{\cdot}m^2$	kg	lit. / min.
TS-539	72.4	67.1	15	8000	4.5(45)	0.012	6.9	3.0
TS-866	168	155.5	25	5600	4.5(45)	0.056	16.3	4.0

DIMENSIONS

Model	A	B	B1	C	D	E	F	G1		G2		H	J	K	L	L1	L2	M1	M2	M3
	I.D.					h7		max.	min.	max.	min.									
TS-539	107	143	141	125	125	110	52	15	0	42.5	27.5	57	91	124	6~M10x20	M8x60	12	M45x1.5	25	12
TS-866	165	211	207	190	190	168	85	25	0	55	30	72.5	107	149	12~M10x20	M10x80	17.5	M75x2	35	15

Model	N1	N2	N3	O1	O2	P	Q1	Q2	Q3	R	S	T	U	V	W1	W2	X1	X2	Y1	Y2	Z
				(H8)	(H8)					(g7)	(H7)										
TS-539	M44x1.5	26	8	42	39	85	8.5	30	RC1/4	42	69	72	103	10	62.5	100	54	M6x12	90	M5x12	5
TS-866	M74x1.5	37	8	72	66.5	105	12	45	RC1/2	72	100	111	154	12	95	140	88	M6x12	140	M6x10	5

ROTATING HYDRAULIC CYLINDER WITH THRU-HOLE AND SAFETY DEVICE

- Super high speed, light weight large Through-Hole.
- Built-in check valve which prevents the internal pressure from sudden declining so that the workpiece will not fly out and cause a serious accident.

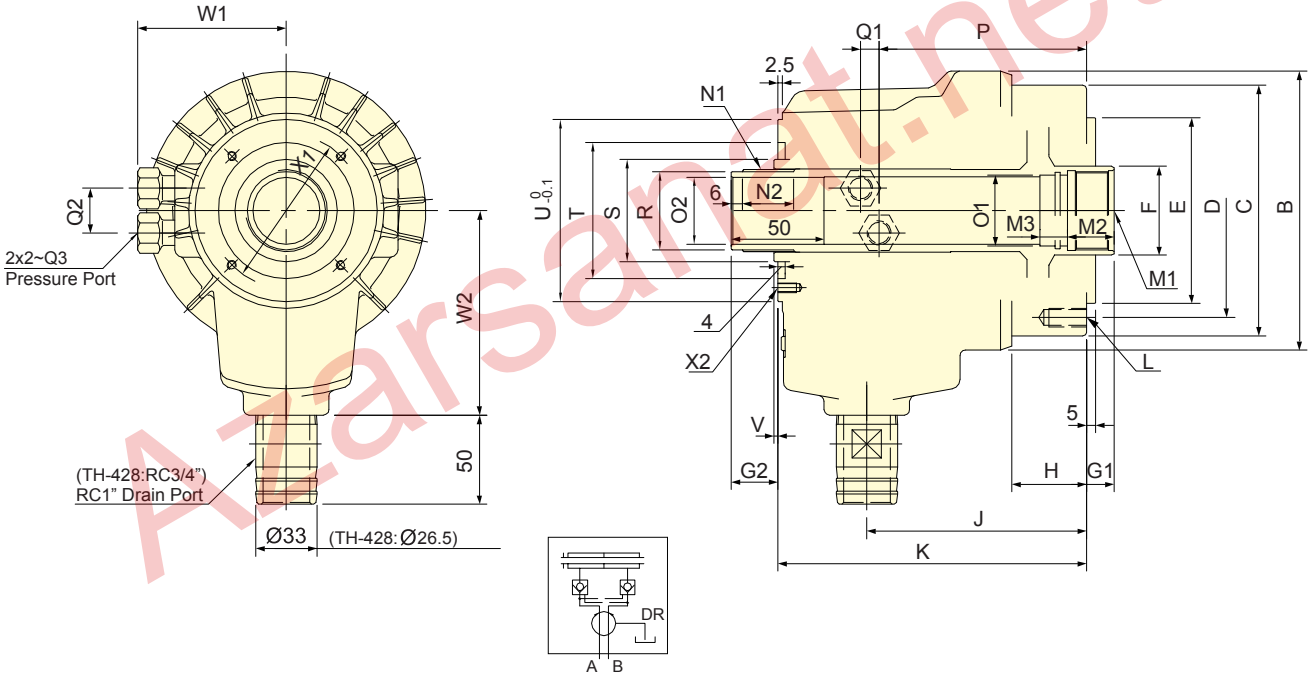

Subject to technical changes

SPECIFICATIONS

Model	Eff. piston area		Piston stroke	Max. speed	Max. pressure	I	Weight	Total oil leakage
	Extend	Retract				Moment of inertia		
	cm^2	cm^2	mm	min^{-1}(r.p.m.)	MPa(kgf/cm^2)	$kg{\cdot}m^2$	kg	lit. / min.
TH-428	53.2	50.5	10	8000	4.0(40)	0.008	5.8	3.0
TH-A536	69.8	67.5	15	8000	4.0(40)	0.05	8.3	3.0

DIMENSIONS

Model	A I.D.	B	C	D	E (h7)	F	G1 max.	G1 min.	G2 max.	G2 min.	H	J	K	L	M1	M2	M3
TH-428	90	130	120	100	80	40	10	0	35	25	45	127.5	155	6-M8x15	M33x1.5	25	12
TH-A536	105	150	135	115	100	48	15	0	40	25	40	118	166	6-M10x20	M42x1.5	25	15

Model	N1	N2	O1 (H8)	O2 (H8)	P	Q1	Q2	Q3	R (g7)	S	T	U	V	W1	W2	X1	X2
TH-428	M34x1.5	26	30	28	101.5	11	24	RC1/4	32	45	65	86	4	72	105	76	M4x7
TH-A536	M44x1.5	28	38	36	111.5	10	24	RC1/4	42	55	73	98	4	80	110	83	M5x10

SMALL TYPE ROTARY HYDRAULIC CYLINDER WITH THRU-HOLE AND SAFETY DEVICE

- This is a compact, short form, light weight through-hole rotary cylinder.
- With patented build-in safety check valves and pressure relief valves.
- Large feed port and drain port, large input and keep drain smoothly.
- Can be screwed from the front end or rear end of cylinder when mounting.
- For use with vertical or horizontal spindles.

■ Patent numbers :
Taiwan : PAT.NO.M491534
China : PAT.NO.ZL201420584274.5

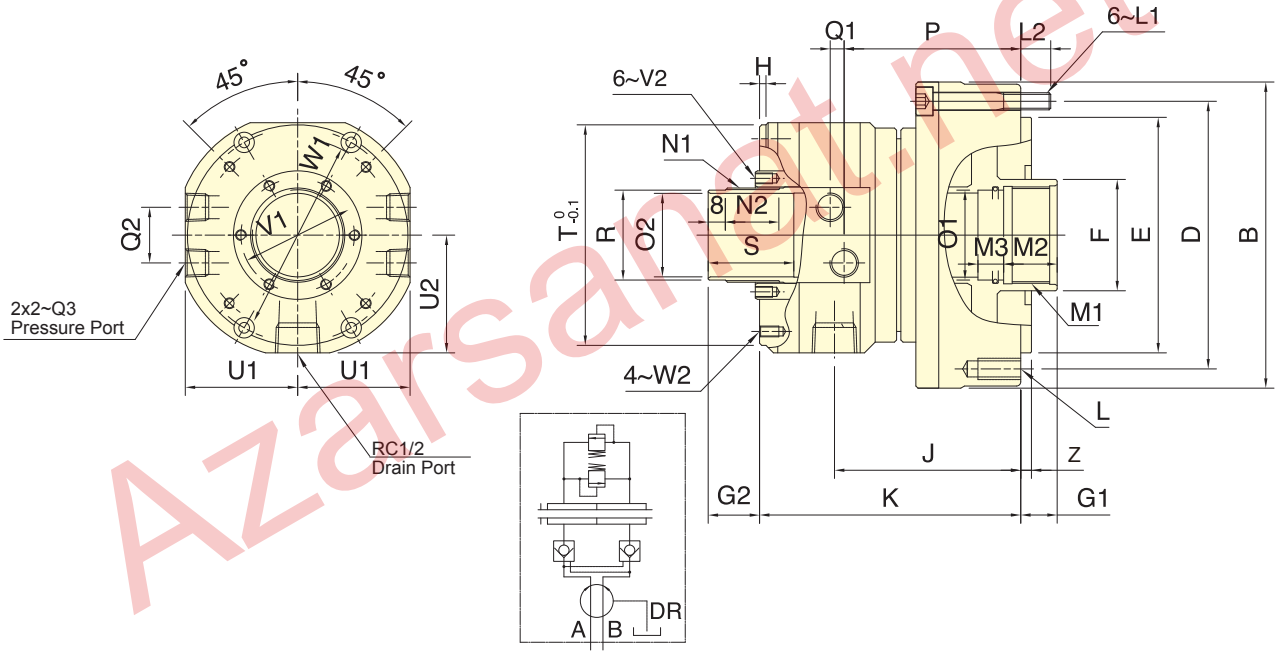

Subject to technical changes

SPECIFICATIONS

Model	Eff. piston area		Piston stroke	Max. speed	Max. pressure	I	Weight	Total oil leakage
	Extend	Retract				Moment of inertia		
	cm^2	cm^2	mm	min^{-1}(r.p.m.)	MPa(kgf/cm^2)	$kg{\cdot}m^2$	kg	lit. / min.
TR-539	72.4	67.1	15	8000	4.0(40)	0.010	6.8	3.0
TR-646	105.0	93.9	15	7000	4.0(40)	0.015	9.5	3.0

DIMENSIONS

Model	A	B	C	D	E	F	G1		G2		H	J	K	L	L1	L2	M1	M2
	I.D.				h7		max.	min.	max.	min.								
TR-539	107	143	125	125	110	52	15	0	34	19	4	97	133	6-M10x20	M8x60	12	M45x1.5	25
TR-646	128	165	147	147	130	65	15	0	34	19	3.5	97	135	12-M10x20	M8x60	11.5	M55x2	25

Model	M3	N1	N2	O1	O2	P	Q1	Q2	Q3	R	S	T	U1	U2	V1	V2	W1	W2	Z
				H8	H8					g7									
TR-539	12	M44x1.5	25	42	39	92.5	6.5	26	RC1/4	42	40	103	52.5	55	53	M5x8	90	M5x9	5
TR-646	13	M52x1.5	25	50	46	93	6.5	32	RC3/8	50	50	116	59	62	61.5	M5x9	98	M5x9	5

ROTATING HYDRAULIC CYLINDER WITH SAFETY DEVICE

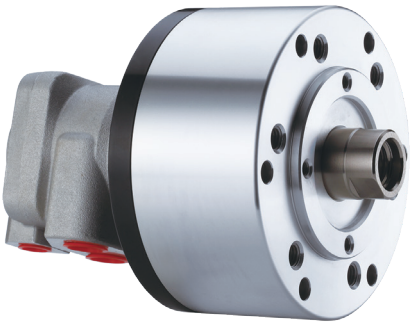

- For short form, light weight and high speed rotary cylinder.
- Built-in safety check valves and pressure relief valves.
- Can screw it from the rear end of the cylinder when mounting.

■ The drain port should be independently connected to oil tank to avoid back pressure.

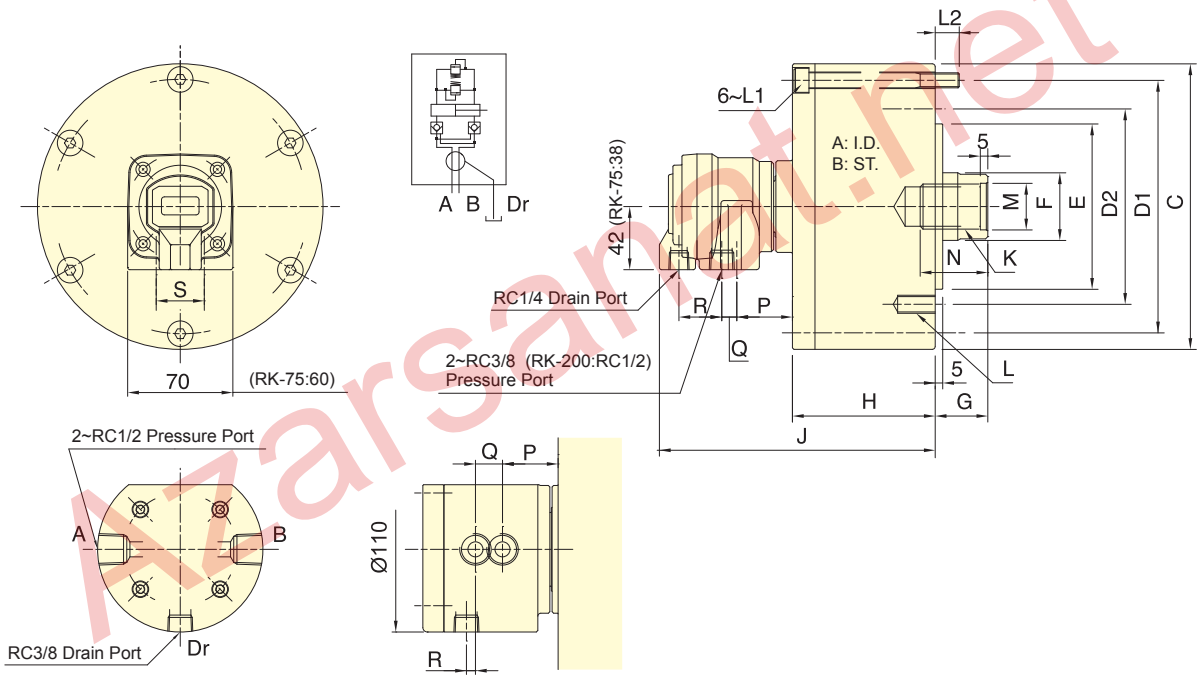

RK-250

Subject to technical changes

SPECIFICATIONS

Model	Eff. piston area		Piston stroke	Max. speed	Max. pressure	I	Weight
	Extend	Retract				Moment of inertia	
	cm^2	cm^2	mm	min^{-1}(r.p.m.)	MPa(kgf/cm^2)	kg·m^2	kg
RK-75	44.2	37.1	15	6000	4.0 (40)	0.01	2.9
RK-100	78.5	71.5	20	6000	4.0 (40)	0.03	4.4
RK-125	122.7	113.1	25	6000	4.0 (40)	0.05	6.9
RK-150	176.7	160.8	30	5500	4.0 (40)	0.09	9.5
RK-200	314.1	290.4	35	5500	4.0 (40)	0.28	15.4
RK-250	469.1	436.0	60	2000	5.0(50)	0.40	45.2

DIMENSIONS

Model	A	B	C	D1	D2	E (h7)	F	G max.	G min.	H	J	K	L	L1	L2	M (H8)	N	P	Q	R	S
RK-75	75	15	107	90	90	65	30	45	30	57	148	M20x2.5	6-M8x16	M8x60	12	21	35	41.5	10	27.5	26
RK-100	100	20	132	115	100	80	30	45	25	72	163	M20x2.5	6-M10x20	M8x75	12	21	35	39.5	10	28.5	32
RK-125	125	25	160	140	130	110	35	50	25	82	172	M24x3.0	6-M12x20	M8x85	12	25	45	38.5	10	28.5	32
RK-150	150	30	190	170	130	110	45	55	25	95	184	M30x3.5	12-M12x24	M10x100	16	32	45	37	10	28.5	32
RK-200	200	35	245	220	145	120	55	70	35	115	201	M36x4.0	12-M16x30	M10x125	21	38	60	38	6	28.5	28
RK-250	245	60	307	275	220	160	65	85	25	165	255	M42x3.0	12-M20x35	M16x175	28	45	65	33	18	6	-

ROTATING HYDRAULIC CYLINDER

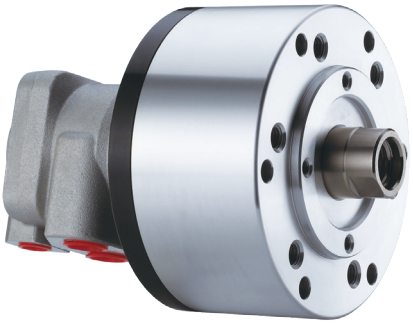

- For short form, light weight and high speed rotary cylinder.
- Can screw it from the rear end of the cylinder when mounting.

- The drain port should be independently connected to oil tank to avoid back pressure.

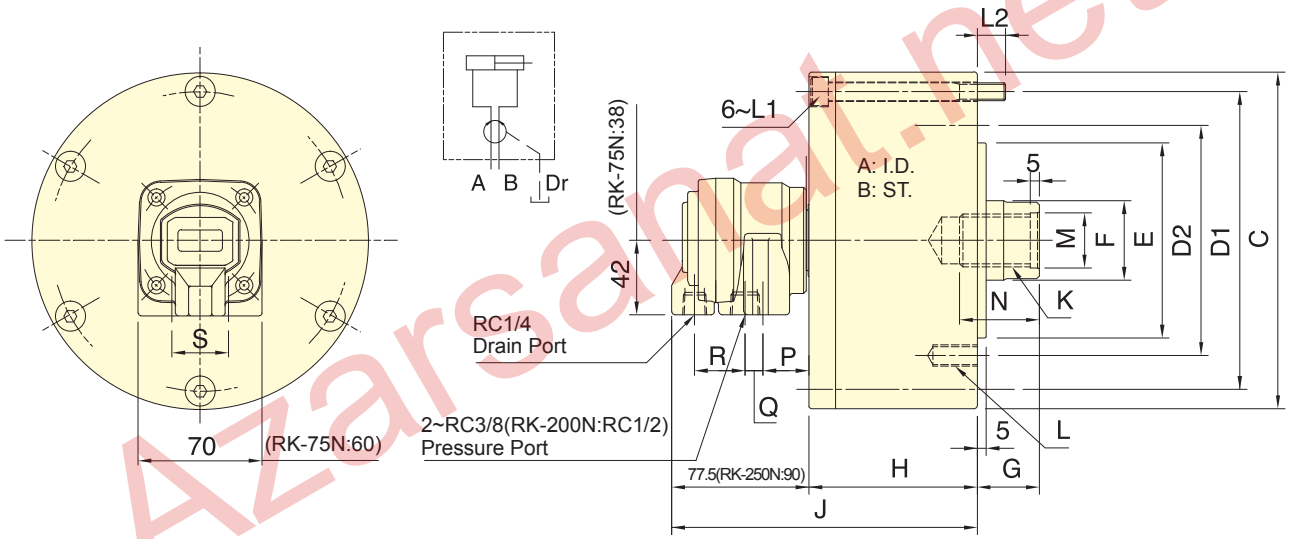

Subject to technical changes

SPECIFICATIONS

Model	Eff. piston area		Piston stroke	Max. speed	Max. pressure	I	Weight
	Extend	Retract				Moment of inertia	
	cm^2	cm^2	mm	min^{-1}(r.p.m.)	MPa(kgf/cm^2)	$kg{\cdot}m^2$	kg
RK-75N	44.2	37.1	15	6000	4.0(40)	0.01	2.8
RK-100N	78.5	71.5	20	6000	4.0(40)	0.03	4.3
RK-125N	122.7	113.1	25	6000	4.0(40)	0.05	6.8
RK-150N	176.7	160.8	30	5500	4.0(40)	0.09	9.4
RK-200N	314.1	290.4	35	5500	4.0(40)	0.28	15.3
RK-250N	469.1	436.0	60	2000	5.0(50)	0.40	45.2

DIMENSIONS

Model	A	B	C	D1	D2	E (h7)	F	G max.	G min.	H	J	K	L	L1	L2	M (H8)	N	P	Q	R	S
RK-75N	75	15	107	90	90	65	30	45	30	57	134.5	M20x2.5	6~M8x16	M8x60	12	21	35	28	10	27.5	26
RK-100N	100	20	132	115	100	80	30	45	25	72	149.5	M20x2.5	6~M10x20	M8x75	12	21	35	26	10	28.5	32
RK-125N	125	25	160	140	130	110	35	50	25	82	159.5	M24x3.0	6~M12x20	M8x85	12	25	45	26	10	28.5	32
RK-150N	150	30	190	170	130	110	45	55	25	95	172.5	M30x3.5	12~M12x24	M10x100	16	32	45	26	10	28.5	32
RK-200N	200	35	245	220	145	120	55	70	35	115	192.5	M36x4.0	12~M16x30	M10x125	21	38	60	30	6	28.5	28
RK-250N	245	60	307	275	220	160	65	85	25	165	255	M42x3.0	6~M20x2.5	M16x175	28	45	65	37	18	6	-

ROTATING HYDRAULIC CYLINDER

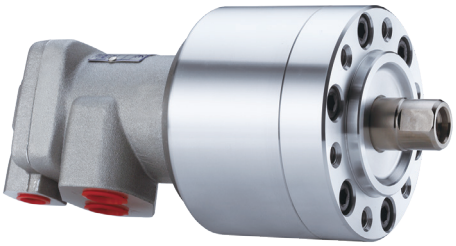

- The rotary valve and cylinder body, all made of special light alloy, light-weight.
- Through unique design, the rotary valve enables the inside bearing to get sufficient lubricating and cooling and endure high-speed rotary for longer service life.

■ The drain port should be independently connected to oil tank to avoid back pressure.

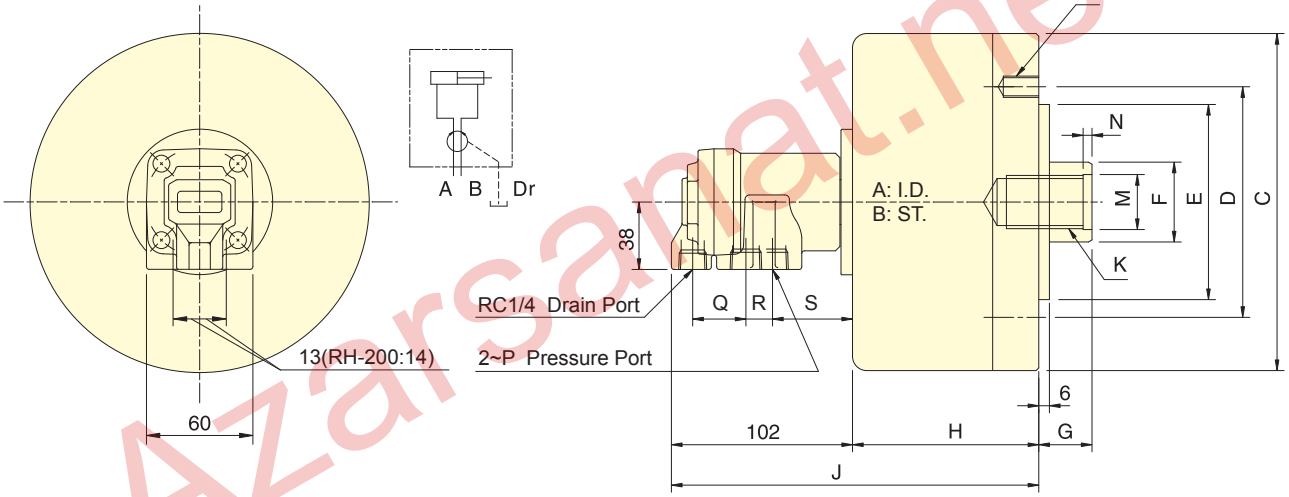

Subject to technical changes

SPECIFICATIONS

Model	Eff. piston area		Piston stroke	Max. speed	Max. pressure	I	Weight
	Extend	Retract				Moment of inertia	
	cm^2	cm^2	mm	min^{-1}(r.p.m.)	MPa(kgf/cm^2)	$kg{\cdot}m^2$	kg
RH-65	31.0	27.9	15	6000	3.5(35)	0.01	2.9
RH-80	47.7	42.8	15	6000	3.5(35)	0.01	3.4
RH-100	75.4	70.5	20	5500	3.5(35)	0.04	4.9
RH-125	119.6	112.5	25	5500	3.5(35)	0.08	6.8
RH-200	310.0	286.3	35	4000	4.0(40)	0.38	20.4

DIMENSIONS

Model	A	B	C	D	E (h7)	F	G max.	G min.	H	J	K	L	M (H8)	N	P	Q	R	S
RH-65	65	15	98	80	60	22	45	30	73	175	M12x1.75x30	6~M8x16	14	4	RC3/8	30	15	45
RH-80	80	15	112	90	65	25	45	30	74	176	M16x2.0x30	6~M8x16	17	4	RC3/8	30	15	45
RH-100	100	20	135	100	80	25	45	25	88.5	190.5	M16x2.0x30	6~M10x20	17	4	RC3/8	30	15	45
RH-125	125	25	160	130	110	30	50	25	95.5	197.5	M20x2.5x35	6~M12x20	21	4	RC3/8	30	15	45
RH-200	200	35	245	145	120	55	70	35	130	232	M36x4	12~M16x30	38	5	RC1/2	31	16	43

ROTATING AIR CYLINDER

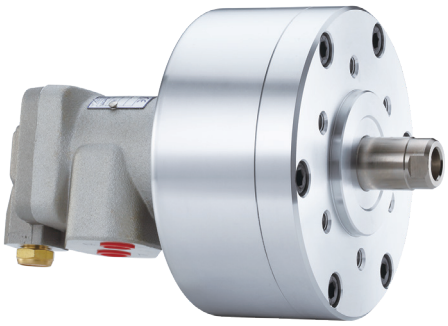

- The rotary valve and cylinder body, all made of special light alloy, are light-weight.
- Through unique design, the rotary valve can considerably reduce the waste in compressing air and efficiently increase its utillization.
- When used, a little oil mist should be contained.

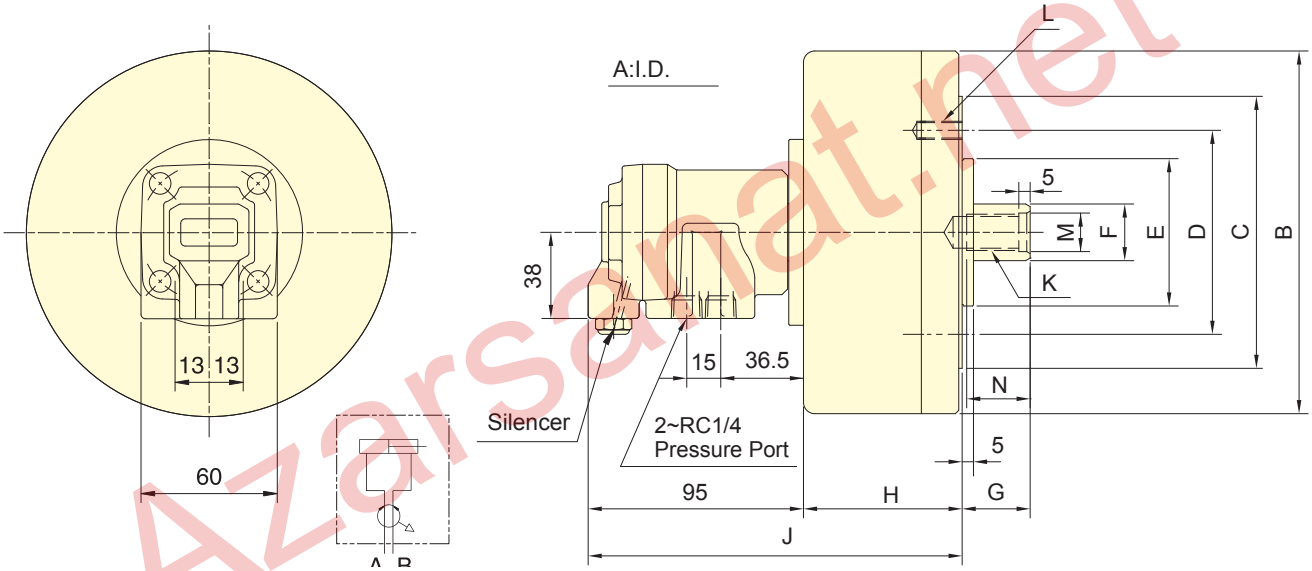

Subject to technical changes

SPECIFICATIONS

Model	Eff. piston area		Piston stroke	Max. speed	Max. pressure	I	Weight	Air Leakage (6kgf/cm²)
	Extend	Retract				Moment of inertia		
	cm²	cm²	mm	min⁻¹(r.p.m.)	MPa(kgf/cm²)	kg·m²	kg	cc/sec
RA-100	77.0	74.4	15	6000	0.8(8)	0.03	3.9	400
RA-130	131.2	124.7	15	5000	0.8(8)	0.05	5.2	400
RA-170	225.4	219.0	20	5000	0.8(8)	0.18	8.5	400
RA-220	378.6	369.3	25	4000	0.8(8)	0.36	14.5	400
RA-270	571.0	562.9	30	3000	0.8(8)	0.75	18.4	400

DIMENSIONS

Model	A	B	C	D	E (h7)	F	G max.	G min.	H	J	K	L	M (H8)	N
RA-100	100	130	-	80	60	22	50	35	65	160	M12x1.75	6-M8x16	13	25
RA-130	130	160	120	90	65	25	45	30	70	165	M16x2.0	6-M8x16	17	30
RA-170	170	200	140	100	80	25	45	25	85	180	M16x2.0	6-M10x18	17	30
RA-220	220	255	170	130	110	30	50	25	91	186	M20x2.5	6-M12x20	21	35
RA-270	270	305	190	130	110	35	55	25	105	200	M24x3.0	6-M12x20	25	40

RS ROTATING HYDRAULIC CYLINDER WITH STROKE CONTROL AND SATETY DEVICE

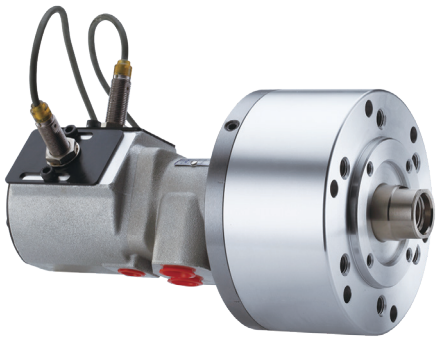

- For short form, high speed and stroke control.
- With proximity sensor , the movement of the position is easy to adjust and confirm when operating.
- Built-in safety check valves and pressure relief valves.
- Can screw it from the rear end of the cylinder when mounting.

■ The drain port should be independently connected to oil tank to avoid back pressure.

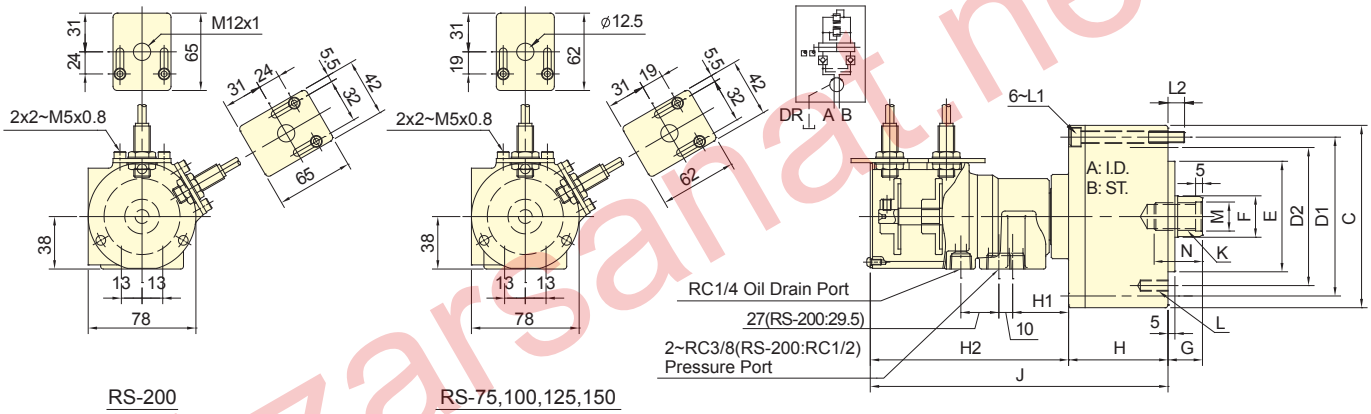

Subject to technical changes

SPECIFICATIONS

Model	Eff. piston area		Piston stroke	Max. speed	Max. pressure	I	Weight
	Extend	Retract				Moment of inertia	
	cm²	cm²	mm	min⁻¹(r.p.m.)	MPa(kgf/cm²)	kg·m²	kg
RS-75	43.0	37.1	15	6000	4.0 (40)	0.01	3.4
RS-100	77.4	71.5	20	6000	4.0 (40)	0.04	4.9
RS-125	121.6	113.1	25	6000	4.0 (40)	0.05	7.4
RS-150	175.6	160.8	30	5500	4.0 (40)	0.10	10.7
RS-200	313.0	290.4	35	5500	4.0 (40)	0.29	15.9

DIMENSIONS

Model	A	B	C	D1	D2	E (h7)	F	G max.	G min.	H	H1	H2	J	K	L	L1	L2	M (H8)	N
RS-75	75	15	107	90	90	65	30	45	30	57	42	145	202	M20x2.5	6~M8x16	M8x60	12	21	35
RS-100	100	20	132	115	100	80	30	45	25	72	42	145	217	M20x2.5	6~M10x20	M8x75	12	21	35
RS-125	125	25	160	140	130	110	35	50	25	82	41	144	226	M24x3.0	6~M12x20	M8x85	12	25	45
RS-150	150	30	190	170	130	110	45	55	25	95	39	142	237	M30x3.5	12~M12x24	M10x100	16	32	45
RS-200	200	35	245	220	145	120	55	70	35	115	34	142.5	257.5	M36x4.0	12~M16x30	M10x125	21	38	60

Proximity sensor : Model IFS287(IFM) DC 10-30V 100mA NPN .

RS-N ROTATING HYDRAULIC CYLINDER WITH STROKE CONTROL

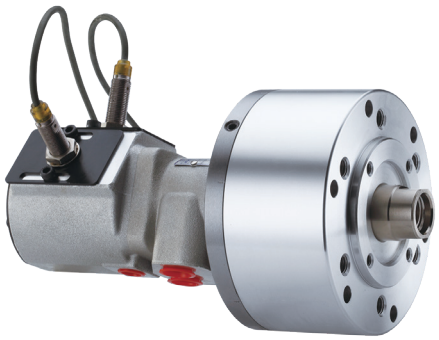

- For short form, high speed and stroke control.
- With proximity sensor , the movement of the position is easy to adjust and confirm when operating.
- Can screw it from the rear end of the cylinder when mounting.

■ The drain port should be independently connected to oil tank to avoid back pressure.

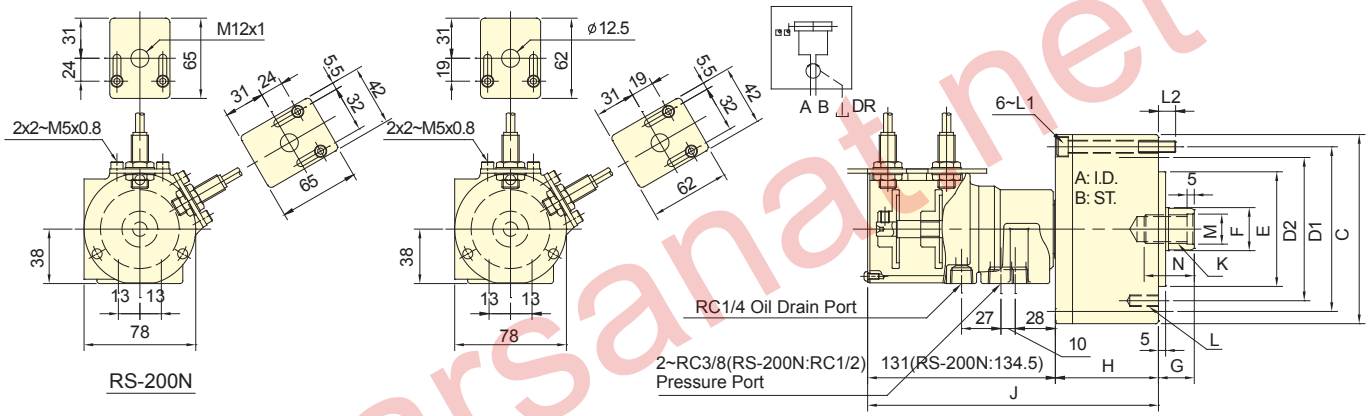

Subject to technical changes

SPECIFICATIONS

Model	Eff. piston area Extend	Eff. piston area Retract	Piston stroke	Max. speed	Max. pressure	I Moment of inertia	Weight
	cm²	cm²	mm	min⁻¹(r.p.m.)	MPa(kgf/cm²)	kg·m²	kg
RS-6520N	32.0	28.3	20	6000	4.0(40)	0.01	3.2
RS-6530N	32.0	28.3	30	6000	4.0(40)	0.01	3.3
RS-75N	43.0	37.1	15	6000	4.0(40)	0.01	3.3
RS-7530N	43.0	37.1	30	6000	4.0(40)	0.013	3.7
RS-100N	77.4	71.5	20	6000	4.0(40)	0.04	4.8
RS-125N	121.6	113.1	25	6000	4.0(40)	0.05	7.3
RS-150N	175.6	160.8	30	5500	4.0(40)	0.16	10.6
RS-200N	313.0	290.4	35	5500	4.0(40)	0.29	15.9

DIMENSIONS

Model	A	B	C	D1	D2	E (h7)	F	G max.	G min.	H	J	K	L	L1	L2	M (H8)	N
RS-6520N	65	20	97	80	80	60	25	45	25	62	193	M16x2.0	6~M8x16	M6x70	14.5	17	30
RS-6530N	65	30	97	80	80	60	25	45	15	62	203	M16x2.0	6~M8x16	M6x80	14.5	17	30
RS-75N	75	15	107	90	90	65	30	45	30	57	188	M20x2.5	6~M8x16	M8x60	12	21	35
RS-7530N	75	30	107	90	90	65	30	45	15	72	203	M20x2.5	6~M8x16	M8x75	12	21	35
RS-100N	100	20	132	115	100	80	30	45	25	72	203	M20x2.5	6~M10x20	M8x75	12	21	35
RS-125N	125	25	160	140	130	110	35	50	25	82	213	M24x3.0	6~M12x20	M8x85	12	25	45
RS-150N	150	30	190	170	130	110	45	55	25	95	226	M30x3.5	12~M12x24	M10x100	16	32	45
RS-200N	200	35	245	220	145	120	55	75	35	115	249.5	M36x4.0	12~M16x30	M10x125	21	38	60

Proximity sensor : Model IFS287(IFM) DC 10-30V 100mA NPN .

ROTATING HYDRAULIC CYLINDER WITH COOLANT CONNECTION AND SATETY DEVICE

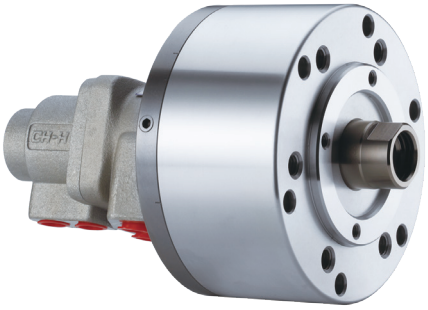

- To allow coolant to be feed from the rear end of the distributor through the rotating union
- Built-in safety check valves and pressure relief valves.

- The drain port should be independently connected to oil tank to avoid back pressure.
- The rotary cylinder should not run without liquid through coolant port.

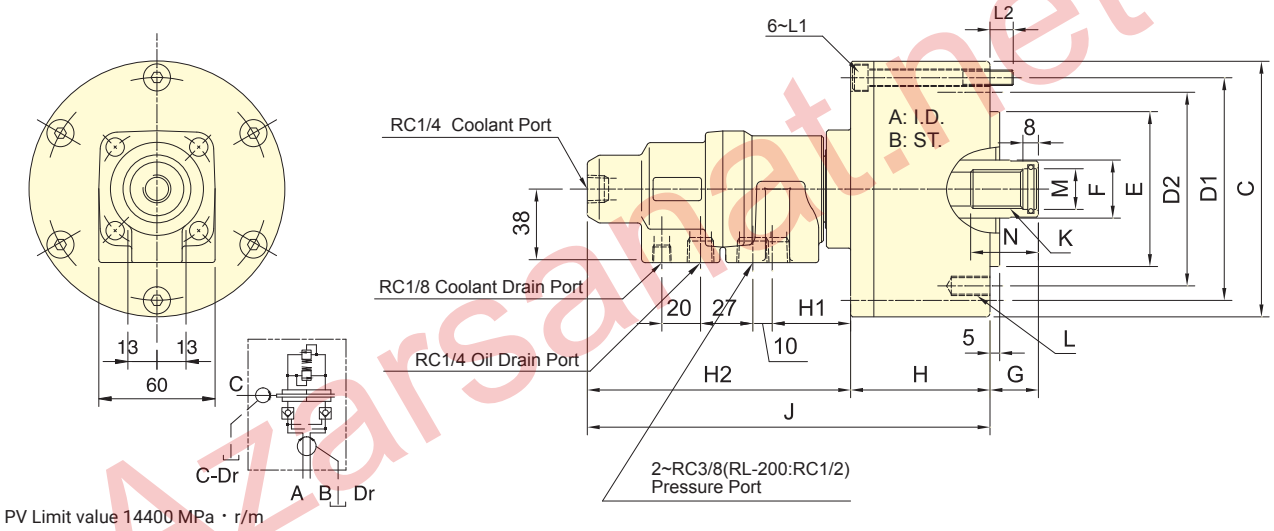

PV Limit value 14400 MPa · r/m

Subject to technical changes

SPECIFICATIONS

Model	Eff. piston area		Piston stroke	Max. speed	Max. pressure	Coolant connection Max. pressure	I	Weight
	Extend	Retract					Moment of inertia	
	cm^2	cm^2	mm	min^{-1}(r.p.m.)	MPa(kgf/cm^2)	MPa (kgf/cm^2)	kg·m^2	kg
RL-75	42.6	37.1	15	6000	4.0(40)	3.5(35)	0.01	3.1
RL-100	77.0	71.5	20	6000	4.0(40)	3.5(35)	0.04	4.6
RL-125	121.2	113.1	25	6000	4.0(40)	3.5(35)	0.06	7.1
RL-150	175.2	160.8	30	5500	4.0(40)	3.5(35)	0.10	9.7
RL-200	312.5	290.4	35	5500	4.0(40)	3.5(35)	0.30	15.6

DIMENSIONS

Model	A	B	C	D1	D2	E (h7)	F	G max.	G min.	H	H1	H2	J	K	L	L1	L2	M (H8)	N
RL-75	75	15	107	90	90	65	30	45	30	57	42	137	194	M20x2.5	6~M8x16	M8x60	12	21	35
RL-100	100	20	132	115	100	80	30	45	25	72	42	137	209	M20x2.5	6~M10x20	M8x75	12	21	35
RL-125	125	25	160	140	130	110	35	50	25	82	41	136	218	M24x3.0	6~M12x20	M8x85	12	25	45
RL-150	150	30	190	170	130	110	45	55	25	95	39	134	230	M30x3.5	12~M12x24	M10x100	16	32	45
RL-200	200	35	245	220	145	120	55	70	35	115	36	132	248	M36x4.0	12~M16x30	M10x125	21	38	60

RL-N ROTATING HYDRAULIC CYLINDER WITH COOLANT CONNECTION

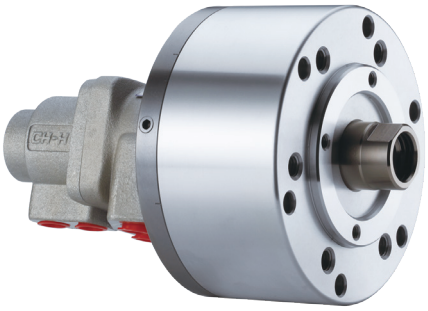

- To allow coolant to be feed from the rear end of the distributor through the rotating union.
- Can screw it from the rear end of the cylinder when mounting.

- The drain port should be independently connected to oil tank to avoid back pressure.
- The rotary cylinder should not run without liquid through coolant port.

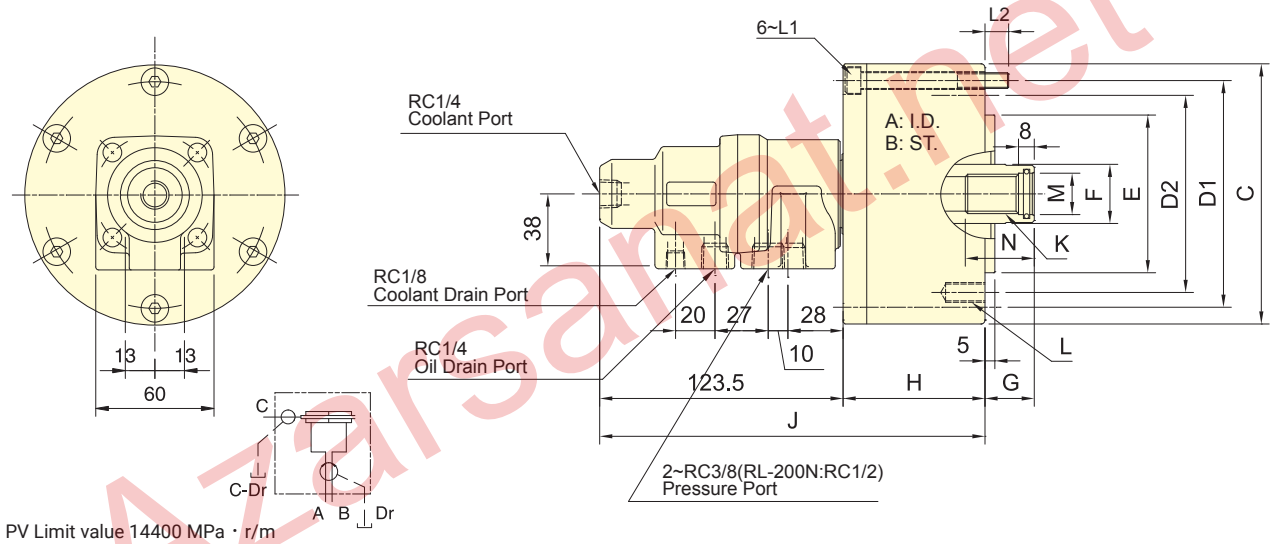

PV Limit value 14400 MPa · r/m

Subject to technical changes

SPECIFICATIONS

Model	Eff. piston area		Piston stroke	Max. speed	Max. pressure	Coolant connection Max. pressure	I	Weight
	Extend	Retract					Moment of inertia	
	cm^2	cm^2	mm	min^{-1}(r.p.m.)	MPa(kgf/cm^2)	MPa (kgf/cm^2)	$kg·m^2$	kg
RL-75N	42.6	37.1	15	6000	4.0 (40)	3.5(35)	0.01	3.0
RL-100N	77.0	71.5	20	6000	4.0 (40)	3.5(35)	0.04	4.5
RL-125N	121.2	113.1	25	6000	4.0 (40)	3.5(35)	0.06	7.0
RL-150N	175.2	160.8	30	5500	4.0 (40)	3.5(35)	0.10	9.6
RL-200N	312.5	290.4	35	5500	4.0 (40)	3.5(35)	0.29	15.5

DIMENSIONS

Model	A	B	C	D1	D2	E (h7)	F	G max.	G min.	H	J	K	L	L1	L2	M (H8)	N
RL-75N	75	15	107	90	90	65	30	45	30	57	180	M20x2.5	6-M8x16	M8x60	12	21	35
RL-100N	100	20	132	115	100	80	30	45	25	72	195	M20x2.5	6-M10x20	M8x75	12	21	35
RL-125N	125	25	160	140	130	110	35	50	25	82	205	M24x3.0	6-M12x20	M8x85	12	25	45
RL-150N	150	30	190	170	130	110	45	55	25	95	218	M30x3.5	12-M12x24	M10x100	16	32	45
RL-200N	200	35	245	220	145	120	55	70	35	115	240	M36x4.0	12-M16x 30	M10x125	21	38	60

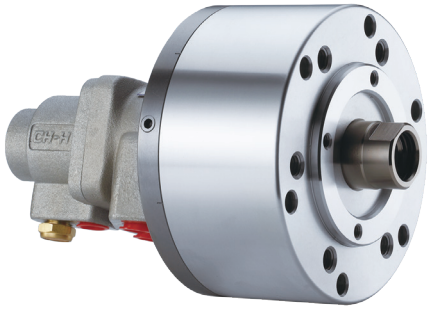

- To allow compressed air to be feed from the rear end of the distributor through the rotating union.
- Can screw it from the rear end of the cylinder when mounting.

- When used, a little oil mist should be contained.

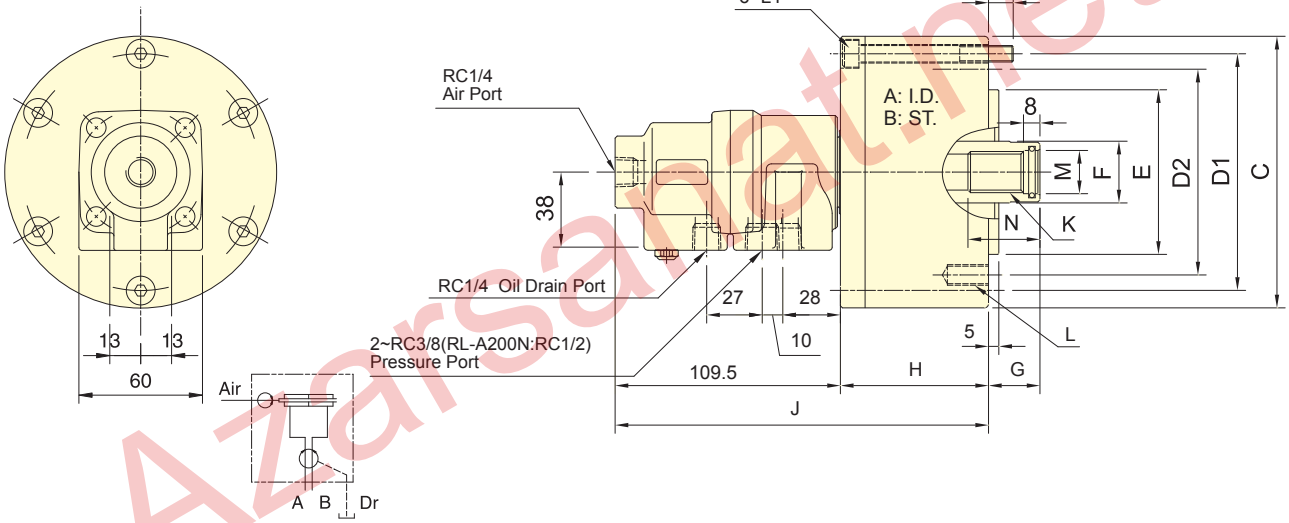

Subject to technical changes

SPECIFICATIONS

Model	Eff. piston area		Piston stroke	Max. speed	Max. pressure	Air connection Max. pressure	I	Weight
	Extend	Retract					Moment of inertia	
	cm^2	cm^2	mm	min^{-1}(r.p.m.)	MPa(kgf/cm^2)	MPa (kgf/cm^2)	kg·m^2	kg
RL- A75N	42.6	37.1	15	6000	4.0(40)	0.8(8)	0.01	3.0
RL- A100N	77.0	71.5	20	6000	4.0(40)	0.8(8)	0.04	4.5
RL- A125N	121.2	113.1	25	6000	4.0(40)	0.8(8)	0.06	7.0
RL- A150N	175.2	160.8	30	5500	4.0(40)	0.8(8)	0.10	9.6
RL- A200N	312.5	290.4	35	5500	4.0(40)	0.8(8)	0.29	15.5

DIMENSIONS

Model	A	B	C	D1	D2	E (h7)	F	G max.	G min.	H	J	K	L	L1	L2	M (H8)	N
RL- A75N	75	15	107	90	90	65	30	45	30	57	166	M20 x2.5	6~M8x 16	M8x60	12	21	35
RL- A100N	100	20	132	115	100	80	30	45	25	72	181	M20 x2.5	6~M10x20	M8x75	12	21	35
RL- A125N	125	25	160	140	130	110	35	50	25	82	191	M24x 3.0	6~M12x20	M8x85	12	25	45
RL- A150N	150	30	190	170	130	110	45	55	25	95	204	M30x3.5	12~M12x24	M10x100	16	32	45
RL- A200N	200	35	245	220	145	120	55	70	35	115	225	M36 x4.0	12~M16x30	M10x125	21	38	60

COMPACT STYLE HYDRAULIC CYLINDER WITH STROKE CONTROL AND SAFETY DEVICE(I)

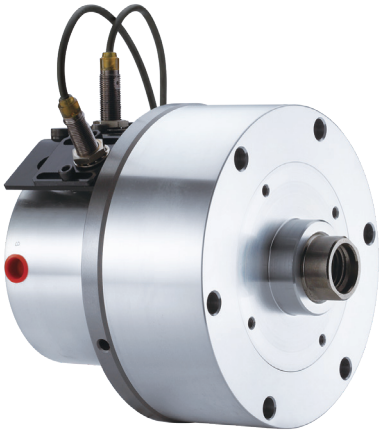

- For short form, light weight and high speed rotary cylinder.
- Built-in safety check valves, pressure relief valves and proximity sensor.
- Can screw it from the rear end of the cylinder when mounting.

■ The drain port should be independently connected to oil tank to avoid back pressure.

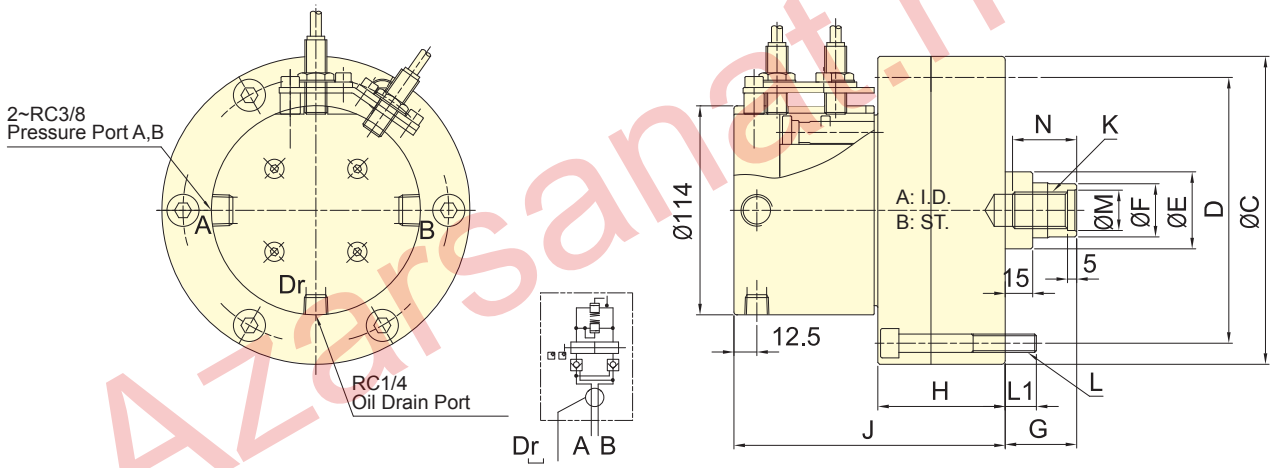

Subject to technical changes

SPECIFICATIONS

Model	Eff. piston area		Piston stroke	Max. speed	Max. pressure	I	Weight
	Extend	Retract				Moment of inertia	
	cm^2	cm^2	mm	min^{-1}(r.p.m.)	MPa(kgf/cm^2)	$kg{\cdot}m^2$	kg
RE-110	92.7	87.9	20	6000	3.5(35)	0.02	6.9
RE-120	110.8	106	21	6000	4.0(40)	0.03	8.8
RE-130	130.4	123.1	30	6000	4.0(40)	0.03	9.1

DIMENSIONS

Model	A	B	C (h7)	D	E	F	G max.	G min.	H	J	K	L	L1	M (H8)	N
RE-110	110	20	145	128	42	29	60	40	66	146	M20x2.5	6~M8x70	12	22	35
RE-120	120	21	168	145	42	29	60	39	69.5	148	M20x2.5	6~M10x75	17	22	35
RE-130	130	30	168	150	50	33	60	30	79.5	158	M24x3.0	6~M10x85	17	27	40

Proximity sensor : Model IFS287(IFM) DC 10-30V 100mA NPN .

COMPACT STYLE HYDRAULIC CYLINDER WITH STROKE CONTROL AND SAFETY DEVICE(II)

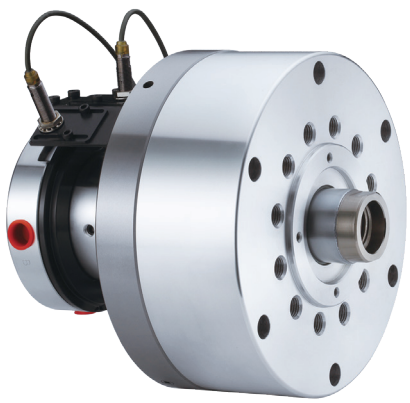

- For short form, light weight and high speed rotary cylinder, suitable for vertical lathe.
- Built-in safety check valves, pressure relief valves and proximity sensor.
- Can screw it from the rear end of the cylinder when mounting.

- The drain port should be independently connected to oil tank to avoid back pressure.

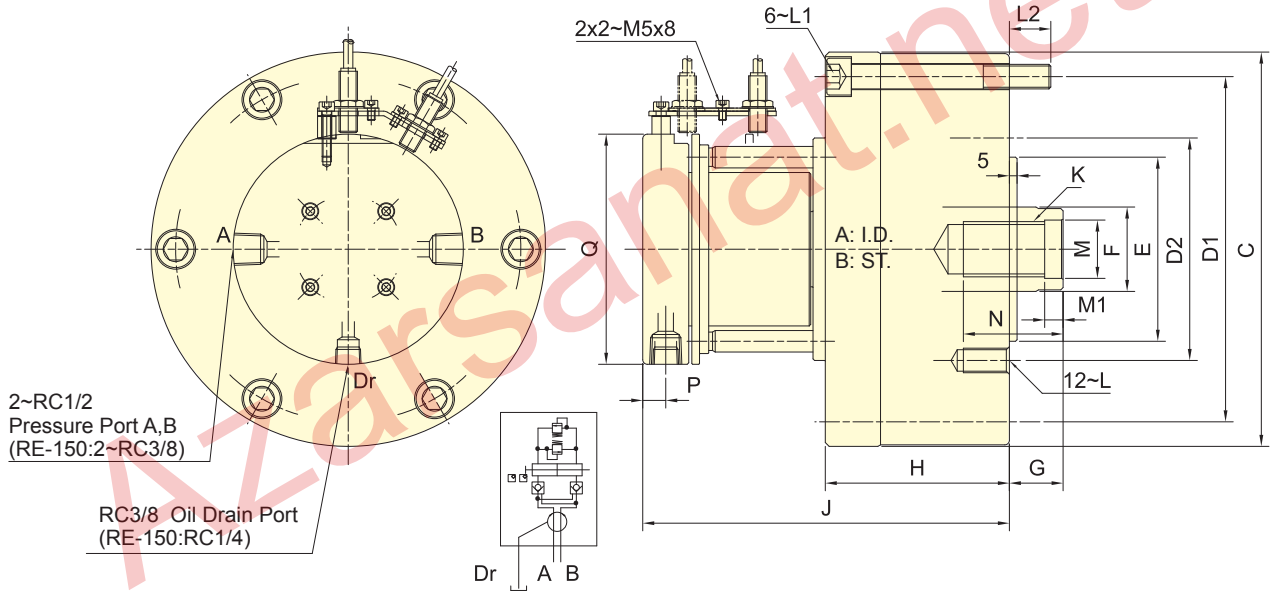

Subject to technical changes

SPECIFICATIONS

Model	Eff. piston area		Piston stroke	Max. speed	Max. pressure	I	Weight
	Extend	Retract				Moment of inertia	
	cm^2	cm^2	mm	min^{-1}(r.p.m.)	MPa(kgf/cm^2)	$kg{\cdot}m^2$	kg
RE-150	174.4	160.8	30	5500	4.0 (40)	0.06	14.9
RE-200K	292.4	274.9	35	4000	4.0 (40)	0.19	29.1
RE-200L	292.4	265.4	50	4000	5.0 (50)	0.21	30.4
RE-250	465.2	438.2	60	2000	5.0 (50)	0.43	47.2

DIMENSIONS

Model	A	B	C	D1	D2	E (h7)	F	G max.	G min.	H	J	K	L	L1	L2	M (H8)	M1	N	P	Q
RE-150	150	30	205	180	130	110	45	60	30	99	177.5	M30x3.5	M12x24	M12x105	18.5	32	10	50	12.5	114
RE-200K	195	35	257	225	145	120	55	73	38	120	239	M36x4.0	M16x30	M16x130	27	38	12	65	15	150
RE-200L	195	50	257	225	170	125	65	80	30	135	254	M42x3.0	M16x30	M16x145	27	45	12	65	15	150
RE-250	245	60	307	275	220	160	65	85	25	165	280	M42x3.0	M20x35	M16x175	28	45	12	65	15	150

Proximity sensor : Model IFS287(IFM) DC 10-30V 100mA NPN .

COMPACT STYLE HYDRAULIC CYLINDER WITH AIR CONNECTION AND SAFETY DEVICE(I)

- For short form, light weight and high speed rotary cylinder. To allow compressed air to be feed from the rear end of the distributor through the rotating union.
- Built-in safety check valves, pressure relief valves and proximity sensor.
- Can screw it from the rear end of the cylinder when mounting.

- The drain port should be independently connected to oil tank to avoid back pressure.
- When used, a little oil mist should be contained.

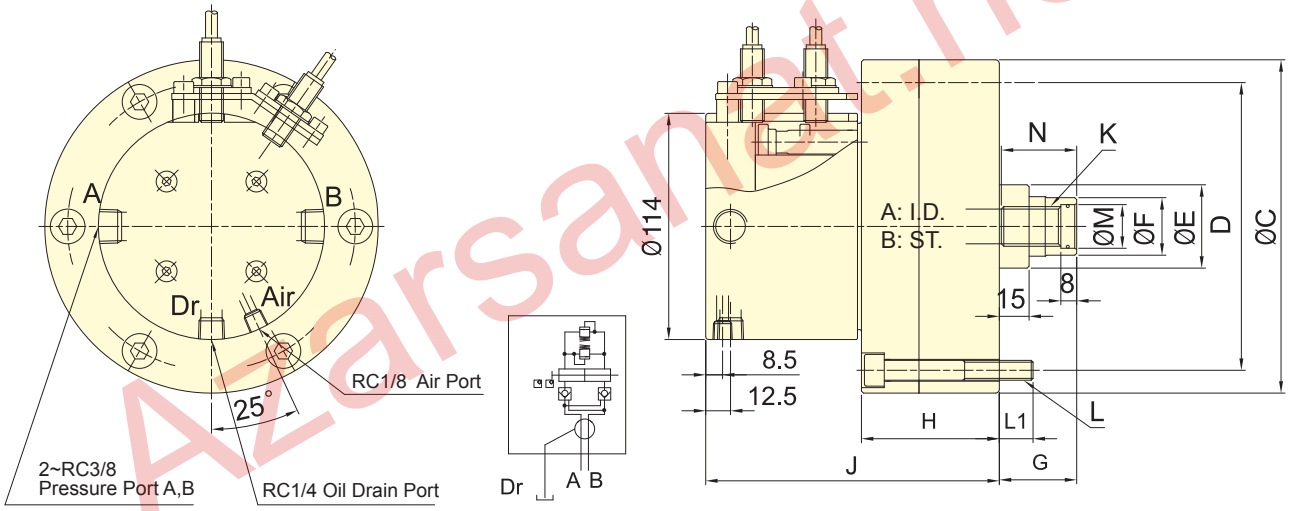

Subject to technical changes

SPECIFICATIONS

Model	Eff. piston area		Piston stroke	Max. speed	Max. pressure	Coolant connection Max. pressure	I	Weight
	Extend	Retract					Moment of inertia	
	cm²	cm²	mm	min⁻¹(r.p.m.)	MPa(kgf/cm²)	MPa (kgf/cm²)	kg·m²	kg
RE-A110	91.2	87.9	20	6000	4.0(40)	0.8(8)	0.02	6.9
RE-A120	109.3	106	21	6000	4.0(40)	0.8(8)	0.02	8.8
RE-A130	128.9	123.1	30	6000	4.0(40)	0.8(8)	0.03	9.1

DIMENSIONS

Model	A	B	C (h7)	D	E	F	G max.	G min.	H	J	K	L	L1	M (H8)	N
RE-A110	110	20	145	128	42	29	60	40	66	146	M20x2.5	6~M8x70	12	22	38
RE-A120	120	21	168	145	42	29	60	39	69.5	148	M20x2.5	6~M10x75	17	22	38
RE-A130	130	30	168	150	50	33	60	30	79.5	158	M24x3.0	6~M10x85	17	27	43

Proximity sensor : Model IFS287(IFM) DC 10-30V 100mA NPN .

RE-A COMPACT STYLE HYDRAULIC CYLINDER WITH AIR CONNECTION AND SAFETY DEVICE(II)

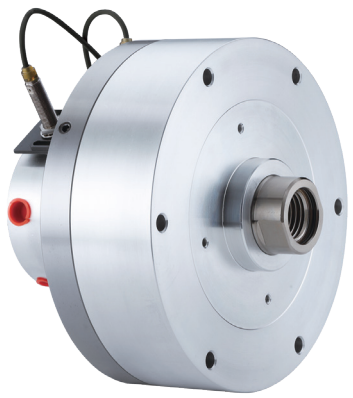

- For short form, light weight and high speed rotary cylinder. To allow compressed air to be feed from the rear end of the distributor through the rotating union.
- Built-in safety check valves, pressure relief valves and proximity sensor.
- Can screw it from the rear end of the cylinder when mounting.

- The drain port should be independently connected to oil tank to avoid back pressure.
- When used, a little oil mist should be contained.

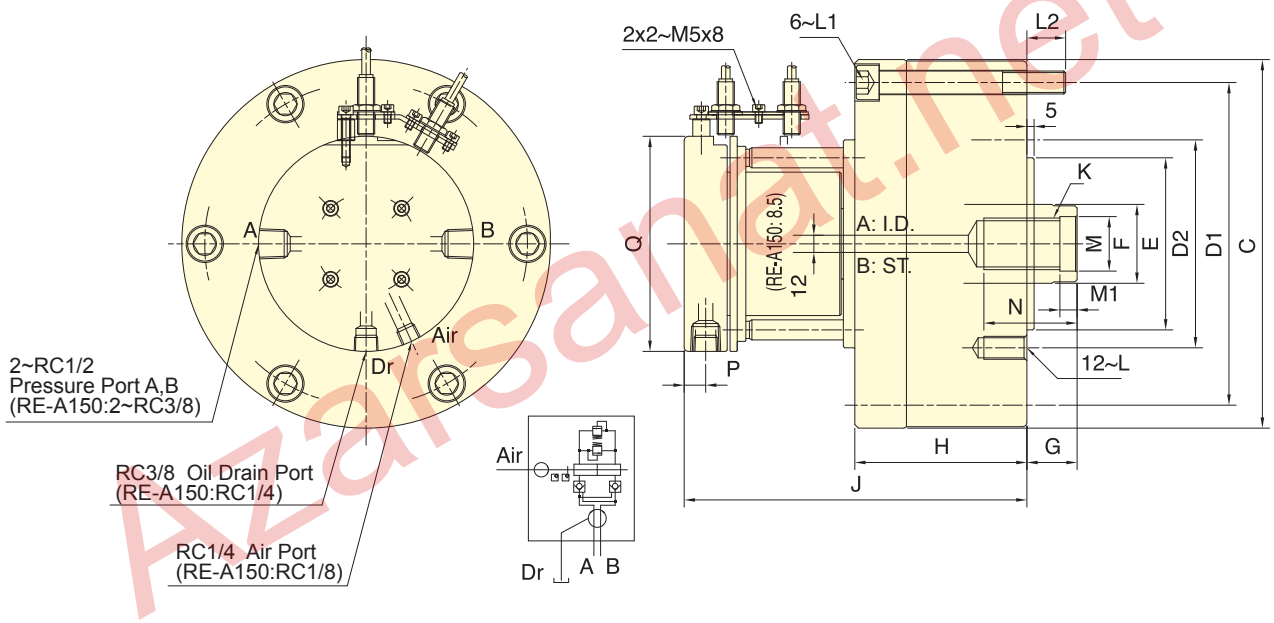

Subject to technical changes

SPECIFICATIONS

Model	Eff. piston area		Piston stroke	Max. speed	Max. pressure	Coolant connection Max. pressure	I	Weight
	Extend	Retract					Moment of inertia	
	cm²	cm²	mm	min⁻¹(r.p.m.)	MPa(kgf/cm²)	MPa (kgf/cm²)	kg·m²	kg
RE-A150	174.4	160.8	30	5500	4.0(40)	0.8(8)	0.06	14.9
RE-A200K	292.4	274.9	35	4000	4.0(40)	0.8(8)	0.19	29.1
RE-A200L	292.4	265.4	50	4000	5.0(50)	0.8(8)	0.21	30.4
RE-A250	465.2	438.2	60	2000	5.0(50)	0.8(8)	0.43	47.2

DIMENSIONS

Model	A	B	C	D1	D2	E (h7)	F	G max.	G min.	H	J	K	L	L1	L2	M (H8)	M1	N	P	Q
RE-A150	150	30	205	180	130	110	45	60	30	99	177.5	M30x3.5	M12x24	M12x105	18.5	32	10	50	12.5	114
RE-A200K	195	35	257	225	145	120	55	73	38	120	239	M36x4.0	M16x30	M16x130	27	38	12	65	15	150
RE-A200L	195	50	257	225	170	125	65	80	30	135	254	M42x3.0	M16x30	M16x145	27	45	12	65	15	150
RE-A250	245	60	307	275	220	160	65	85	25	165	280	M42x3.0	M20x35	M16x175	28	45	12	65	15	150

Proximity sensor : Model IFS287(IFM) DC 10-30V 100mA NPN .

RE-L COMPACT STYLE HYDRAULIC CYLINDER WITH COOLANT CONNECTION AND SAFETY DEVICE(I)

- For short form, light weight and high speed rotary cylinder. To allow coolant to be feed from the rear end of the distributor through the rotating union.
- Built-in safety check valves, pressure relief valves and proximity sensor.
- Can screw it from the rear end of the cylinder when mounting.

- The drain port should be independently connected to oil tank to avoid back pressure.
- The rotary cylinder should not run without liquid through coolant port.

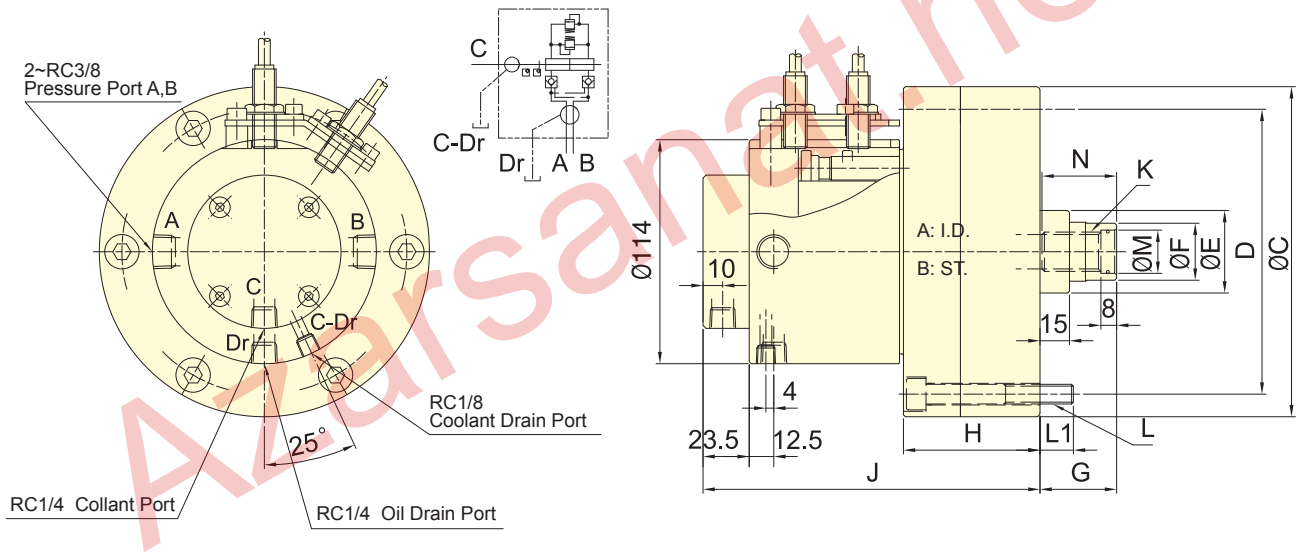

Subject to technical changes

SPECIFICATIONS

Model	Eff. piston area		Piston stroke	Max. speed	Max. pressure	Coolant connection Max. pressure	I	Weight
	Extend	Retract					Moment of inertia	
	cm^2	cm^2	mm	min^{-1}(r.p.m.)	MPa(kgf/cm^2)	MPa (kgf/cm^2)	$kg{\cdot}m^2$	kg
RE-L110	92.7	87.9	20	6000	4.0(40)	1.5(15)	0.02	7.2
RE-L120	109.3	106	21	6000	4.0(40)	1.5(15)	0.03	9.1
RE-L130	128.9	123.1	30	6000	4.0(40)	1.5(15)	0.03	9.5

DIMENSIONS

Model	A	B	C (h7)	D	E	F	G max.	G min.	H	J	K	L	L1	M (H8)	N
RE-L110	110	20	145	128	42	29	60	40	66	169.5	M20x2.5	6~M8x70	12	22	38
RE-L120	120	21	168	145	42	29	60	39	69.5	171.5	M20x2.5	6~M10x75	17	22	38
RE-L130	130	30	168	150	50	33	60	30	79.5	181.5	M24x3.0	6~M10x85	17	27	43

Proximity sensor : Model IFS287(IFM) DC 10-30V 100mA NPN .

RE-L COMPACT STYLE HYDRAULIC CYLINDER WITH COOLANT CONNECTION AND SAFETY DEVICE(II)

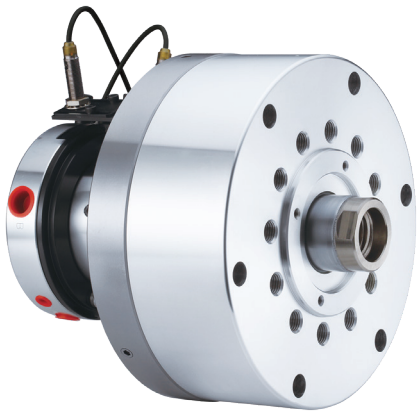

- For short form, light weight and high speed rotary cylinder. To allow coolant to be feed from the rear end of the distributor through the rotating union, suitable for vertical lathe.
- Built-in safety check valves, pressure relief valves and proximity sensor.
- Can screw it from the rear end of the cylinder when mounting.

- The drain port should be independently connected to oil tank to avoid back pressure.
- The rotary cylinder should not run without liquid through coolant port.

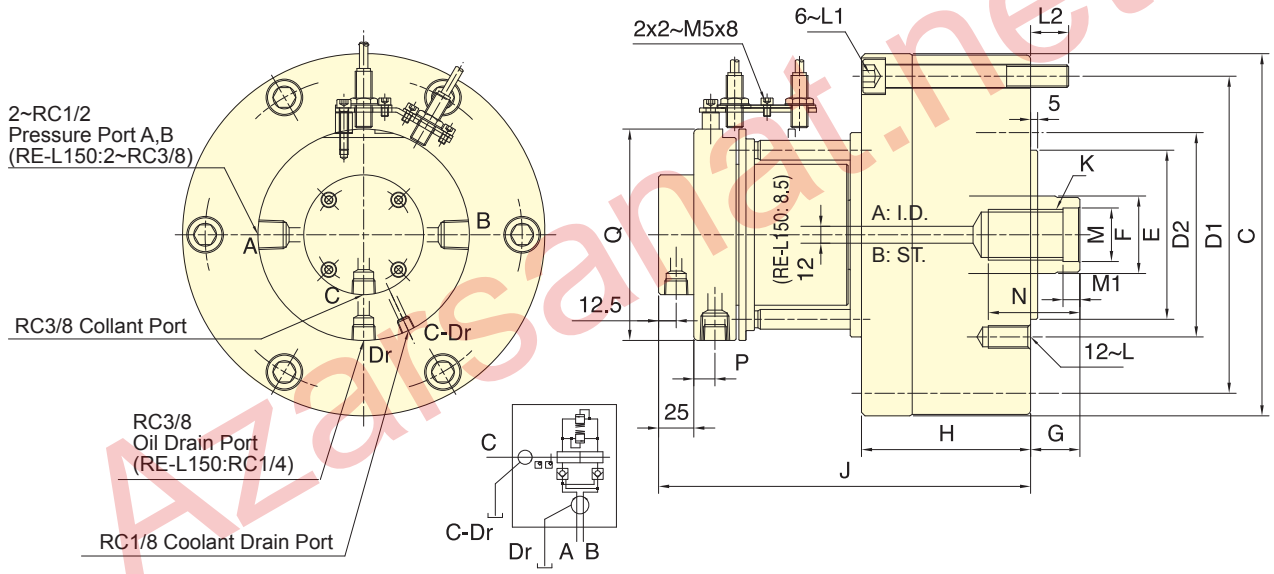

Subject to technical changes

SPECIFICATIONS

Model	Eff. piston area		Piston stroke	Max. speed	Max. pressure	Coolant connection Max. pressure	I	Weight
	Extend	Retract					Moment of inertia	
	cm²	cm²	mm	min⁻¹(r.p.m.)	MPa(kgf/cm²)	MPa (kgf/cm²)	kg·m²	kg
RE-L150	174.4	160.8	30	5500	4.0(40)	1.5(15)	0.06	15.2
RE-L200K	292.4	274.9	35	4000	4.0(40)	1.5(15)	0.19	29.4
RE-L200L	292.4	265.4	50	4000	5.0(50)	1.5(15)	0.21	30.7
RE-L250	465.2	438.2	60	2000	5.0(50)	1.5(15)	0.43	47.5

DIMENSIONS

Model	A	B	C	D1	D2	E (h7)	F	G max.	G min.	H	J	K	L	L1	L2	M (H8)	M1	N	P	Q
RE-L150	150	30	205	180	130	110	45	60	30	99	201	M30x3.5	M12x24	M12x105	18.5	32	10	50	12.5	114
RE-L200K	195	35	257	225	145	120	55	73	38	120	264	M36x4.0	M16x30	M16x130	27	38	12	65	15	150
RE-L200L	195	50	257	225	170	125	65	80	30	135	279	M42x3.0	M16x30	M16x145	27	45	12	65	15	150
RE-L250	245	60	307	275	220	160	65	85	25	165	305	M42x3.0	M20x35	M16x175	28	45	12	65	15	150

Proximity sensor : Model IFS287(IFM) DC 10-30V 100mA NPN .

RD

DOUBLE ROD ROTATING CYLINDER WITH SAFETY DEVICE

Double-Rod / Hydraulic

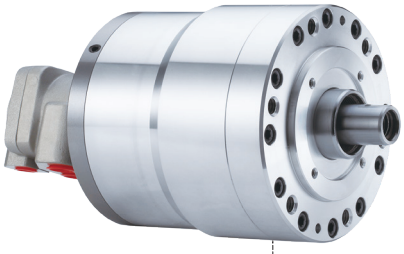

- For short form, light weight, double rod rotary cylinder.
- Built-in safety check valves and pressure relief valves.

■ The drain port should be independently connected to oil tank to avoid back pressure.

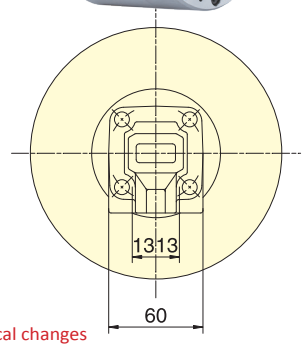

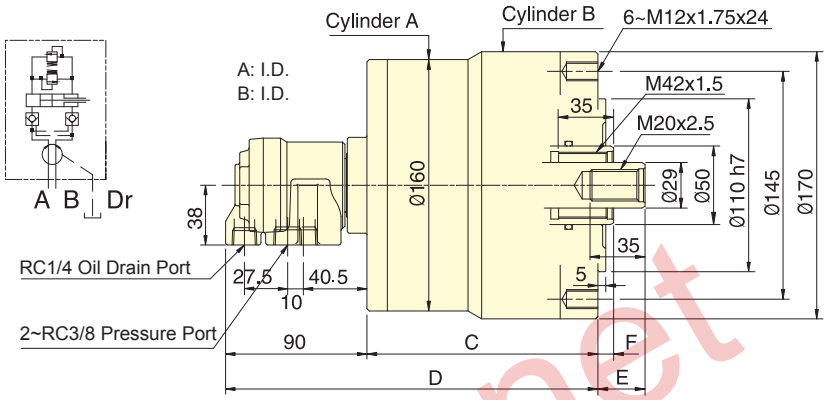

Subject to technical changes

SPECIFICATIONS

Model	Eff. piston area				Piston stroke	Max. speed	Max. pressure	I	Weight
	Extend		Retract					Moment of inertia	
	A	B	A	B					
	cm^2	cm^2	cm^2	cm^2	mm	min^{-1}(r.p.m.)	MPa(kgf/cm^2)	$kg\cdot m^2$	kg
RD-120	122.7	126.1	116.1	113.1	20	5000	3.0(30)	0.14	11.3
RD-125	122.7	126.1	116.1	113.1	25	5000	3.0(30)	0.15	11.5

DIMENSIONS

Model	A	B	C	D	E max.	E min.	F max.	F min.
RD-120	125	130	137	227	60	40	35	15
RD-125	125	130	147	237	55	30	35	10

RD-N

DOUBLE ROD ROTATING CYLINDER

Double-Rod/ Hydraulic

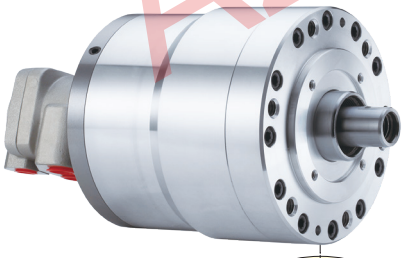

- For short form, light weight, double rod rotary cylinder.

■ The drain port should be independently connected to oil tank to avoid back pressure.

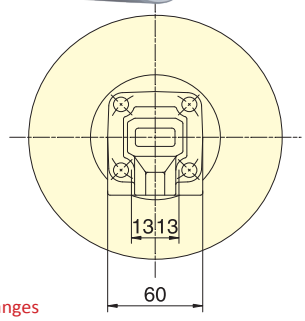

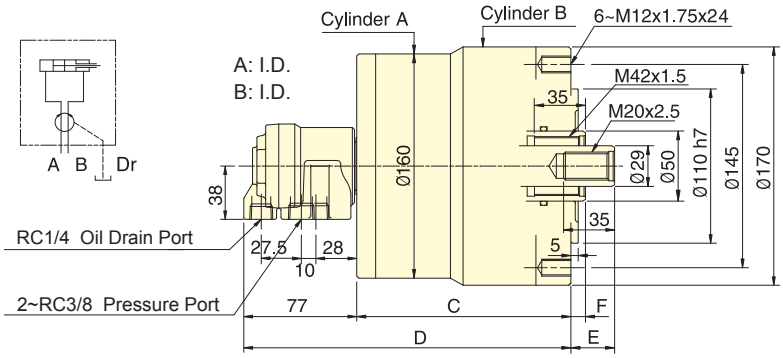

Subject to technical changes

SPECIFICATIONS

Model	Eff. piston area				Piston stroke	Max. speed	Max. pressure	I	Weight
	Extend		Retract					Moment of inertia	
	A	B	A	B					
	cm^2	cm^2	cm^2	cm^2	mm	min^{-1}(r.p.m.)	MPa(kgf/cm^2)	$kg\cdot m^2$	kg
RD-120N	122.7	126.1	116.1	113.1	20	5000	3.0(30)	0.14	11.2
RD-125N	122.7	126.1	116.1	113.1	25	5000	3.0(30)	0.15	11.4

DIMENSIONS

Model	A	B	C	D	E max.	E min.	F max.	F min.
RD-120N	125	130	137	214	60	40	35	15
RD-125N	125	130	147	224	55	30	35	10

RV HYDRAULIC ROTARY VALVE

Hydraulic

- Rotary valve is used for clamping cylinder on rotary table.
- Through unique design, it can make the rotary housing be rotated light force and is free from oil leaking.
- I Type is a single circuit which controls the clamping.
- II Type is a double circuit which separately controls the clamping.

■ The drain port of RV type should be independently connected to oil tank to avoid back pressure.

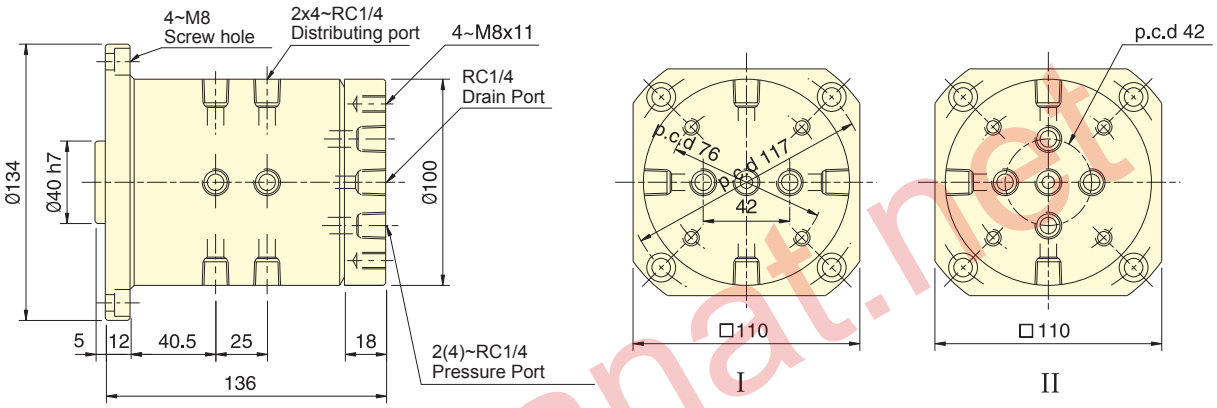

Subject to technical changes

SPECIFICATIONS

Model	Distributing	Max. pressure MPa(kgf/cm²)	Weight kg
RV-31H	4 (by order)	4.0 (40)	7.4

Note: RV can be custom-made.

RV-A AIR ROTARY VALVE

Air

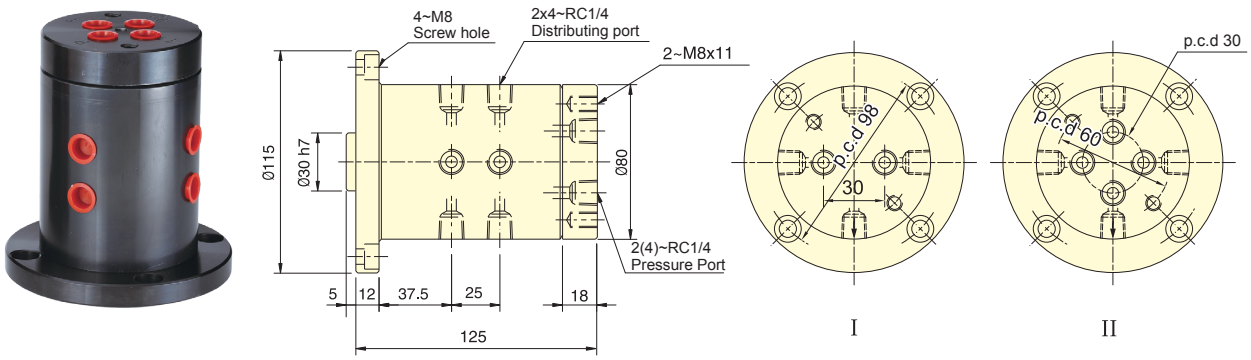

Subject to technical changes

SPECIFICATIONS

Model	Distributing	Max. pressure MPa(kgf/cm²)	Weight kg
RV-A31H	4 (by order)	0.8 (8)	4.8

Note: RV-A can be custom-made.

RJ-80 COOLANT ROTATING JOINT

- Coolant joint for high speed, high pressure. Usable for oil and water-soluble coolant.
- Seal bushing inside is made of cemented carbide and ceramics, which provide higher wear-resistance.
- The joint should not run without liquid through coolant port.

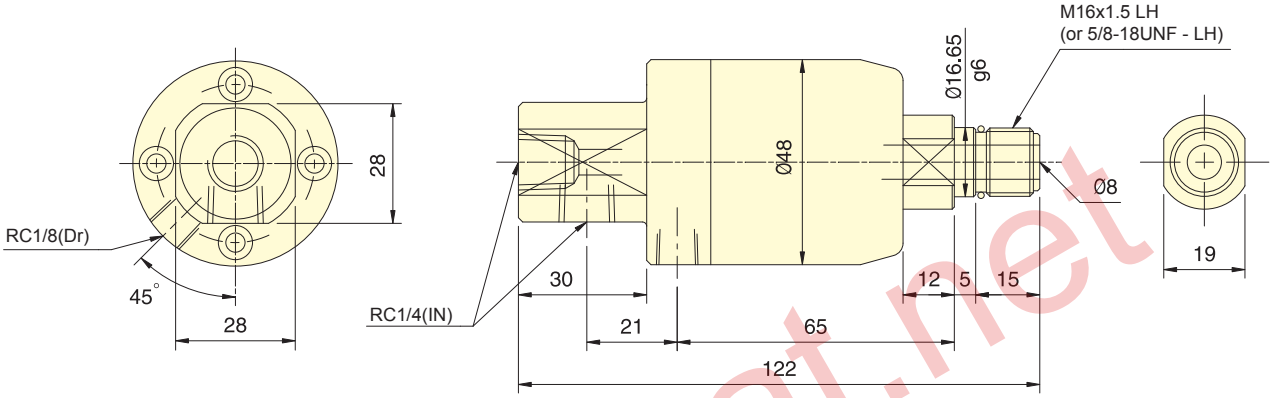

Subject to technical changes

SPECIFICATIONS

Model	PV Limit value (MPa·r/m)	Max. pressure MPa(kgf/cm²)	Delivery amount (at 50 kgf/cm²)	Max. speed min⁻¹(r.p.m.)	Weight (kg)
RJ-80	14400	6.0(60)	28 l/min	8000	0.5

RJ-90 COOLANT ROTATING JOINT WITH AUTOMATIC ON/OFF SEAL

- Coolant joint for high speed, high pressure and medium delivery.
- Usable for oil and water-soluble coolant.
- Seal bushing inside is made of cemented carbide and ceramics, which provide higher wear-resistance.
- The seal will depart automatically if no liquid passes during operation, and will not be dmaged due to dry touching
- Min. pressure is 4kgf/cm².

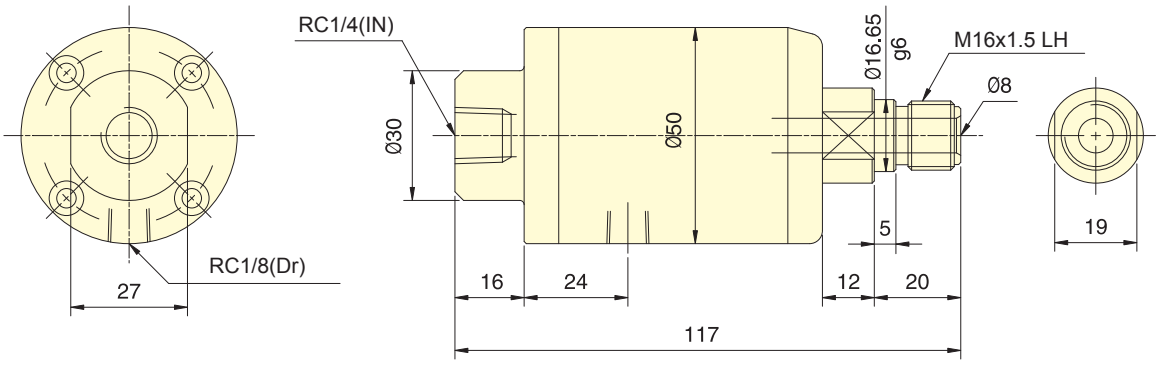

Subject to technical changes

SPECIFICATIONS

Model	PV Limit value (MPa·r/m)	Max. pressure MPa(kgf/cm²)	Delivery amount (at 50 kgf/cm²)	Max. speed min⁻¹(r.p.m.)	Min. pressure MPa(kgf/cm²)	Weight (kg)
RJ-90	17500	7.0(70)	28 l/min	10000	0.4(4)	0.5

STANDARD SOFT BLANK JAW(I)

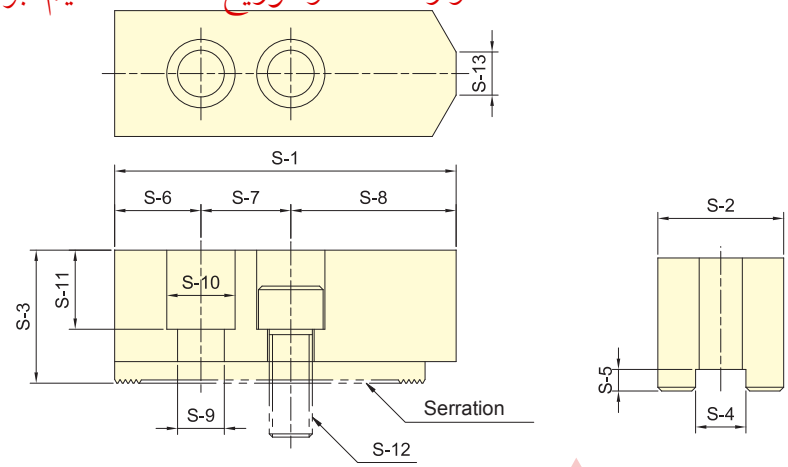

Subject to technical changes

DIMENSIONS

MODEL	S-1	S-2	S-3	S-4	S-5	S-6	S-7	S-8	S-9	S-10	S-11	S-12	S-13	Serration Pitch	Matching Chuck	3 Jaw Weight kg
SJ-04	52	23	23	10	5	10	14	28	9	14	13	M8	3	1.5×60°	3H-204, 3P-04	0.5
SJ-05	62	25	30	10	5	10	14	38	9	14	18	M8	3.5	1.5×60°	3H-205, 3L-205, 3P-05, 3M-05	0.8
SJ-06	73	31	36	12	5	15	20	38	11	17	24	M10	14	1.5×60°	3H-206, 3L-206, 3P-06, 3M-06	1.5
SJ-08	95	35	37	14	5	24	25	46	13	19	22	M12	16	1.5×60°	3H-208, 3L-208, 3P-08, 3M-08	2.4
SJ-10	110	40	42	16	5	30	30	50	13	19	27	M12	18	1.5×60°	3H-210, 3L-210, 3P-10, 3M-10	3.7
*SJ-12H	130	50	50	21	5	40	30	60	18	26	33	M16	23	1.5×60°	3H-12, 3H-212, 3L-212, 3V-12, 3P-12, 3M-12	6.3
SJ-12P	130	50	50	18	5	40	30	60	16	23	33	M14	23	1.5×60°	3H-12, 3H-212, 3L-212, 3V-12, 3P-12, 3M-12	6.5
SJ-15H	165	62	62	22	8	37	43	85	21	32	38	M20	-	1.5×60°	3H-15, 3H-215, 3H-18, 3L-15, 3P-215, 3P-218, 3V-15, 3V-18	12.6
*SJ-15P	165	62	62	25.5	8	37	43	85	21	32	38	M20	-	1.5×60°	3H-15, 3H-215, 3H-18, 3L-15, 3P-215, 3P-218, 3V-15, 3V-18	12.5
SJ-21	180	64	70	25	9	40	60	80	21	32	45	M20	-	3.0×60°	3H-221, 3H-224,3H-232, 3P-221, 3P-224, 3V-21, 3V-24, 3V-32	15.8

* 12"Chucks are originally equipped with SJ-12H.
* 15"Chucks are originally equipped with SJ-15P.

STANDARD SOFT JAW FOR 3U CHUCK

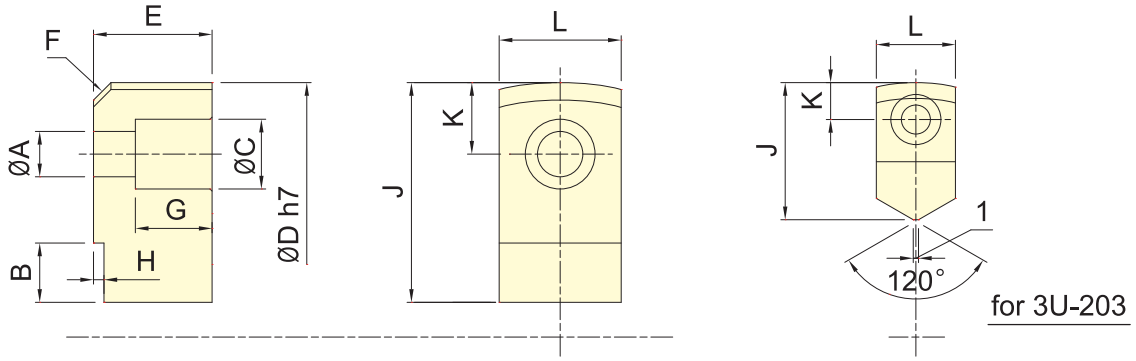

Subject to technical changes

DIMENSIONS

MODEL	A	B	C	D	E	F	G	H	J	K	L
3U-203	5.5	11	9.5	66	12	C3	7	3	26	7	15
3U-204	6.6	11	11	84	17	C4	11	3	32	9.5	20
3U-205	9	13.5	14	108	20	C4	12	3	41.5	13	24
3U-206	11	15	17	129	30	C6	20	3	50	17	30
3U-208	13	17	20	156	34	C6	22	3	63	20.5	35
3U-210	15	20	22	187	39	C6	24	4	74	23	40
3U-212	15	18	22	234	44	C6	29	4	72	23	40

STANDARD SOFT JAW FOR 2D/3D CHUCK

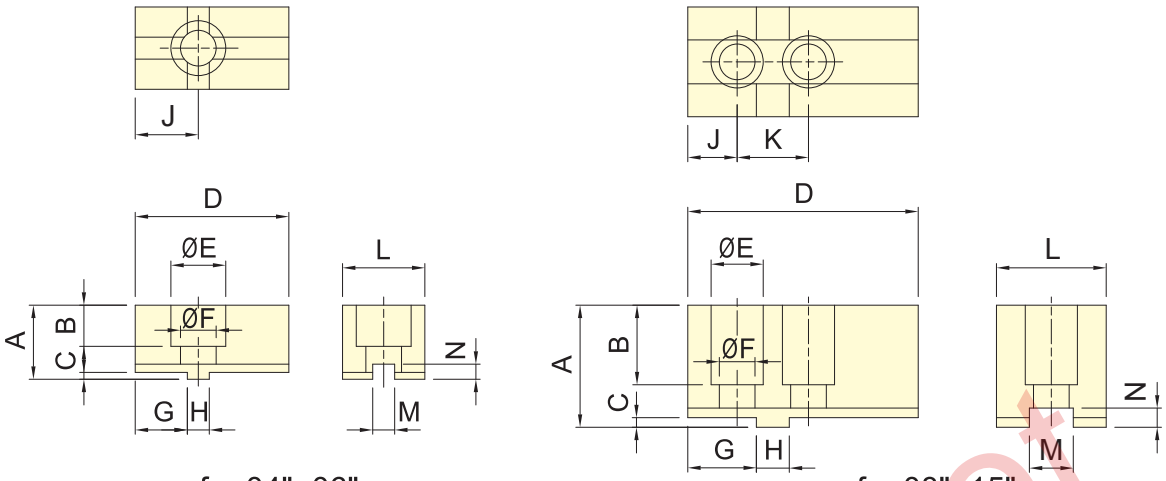

for 04"~06"

for 08"~15"

Subject to technical changes

DIMENSIONS

MODEL	A	B	C	D	E	F	G	H	J	K	L	M	N
3D-04	22	13	2.5	52	17.5	11	15	8	19	-	25	8	5.5
3D-05	27	15	2.5	56	20	13	19	8	23	-	30	8	5.5
3D-06	34	21	3	70	23	15.5	22	10	27	-	35	10	6
3D-08	44.5	29	3.5	84	19	13	25	12	18	26	40	10	7
3D-10	49.5	32	3.5	100	22	15	30.5	15	22	32	50	18	7
3D-12	54.5	36	3.5	120	26	18	33.5	17	24	36	60	20	7
3D-15	65	40	5	165	26	18	50	20	40	40	70	24	10

STANDARD SOFT JAW FOR 3E CHUCK

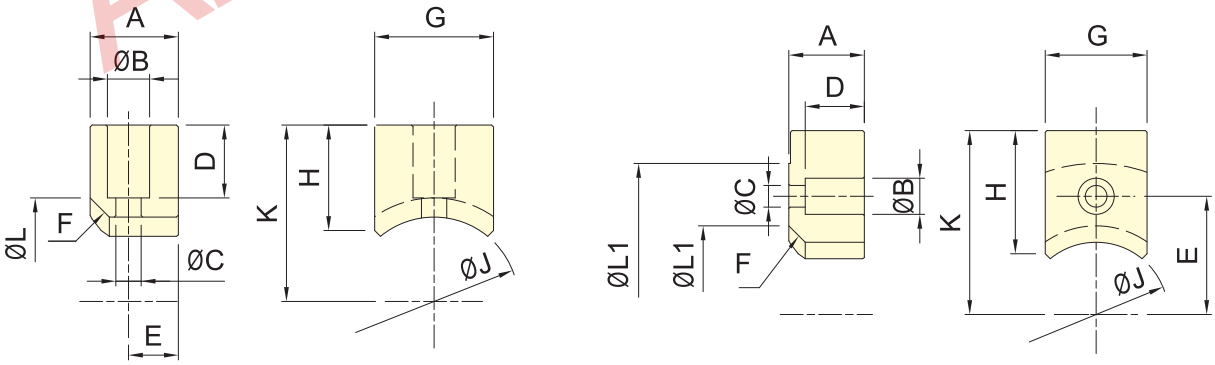

TYPE A

TYPE B

Subject to technical changes

DIMENSIONS

MODEL		A	B	C	D	E	F	G	H	J	K	L	L1
3E-05	TYPE A	20	11	6.6	16.5	10	C5	25	22	29	34.5	39	-
	TYPE B	20	11	6.6	15	25.5	C5	25	30	29	42.5	39	69
3E-06	TYPE A	23	11	7	19	13	C5	31	27.5	44	46	54	-
	TYPE B	23	11	6.6	18	36	C5	31	37.5	44	56	54	92
3E-08	TYPE A	30	14	9	25	15	C6	35	36	50	56	62	-
	TYPE B	30	14	9	24	41	C6	35	56	50	76	62	112
3E-10	TYPE A	35	17.5	11	26.5	17.5	C5	40	40	60	64.5	70	-
	TYPE B	35	17.5	11	26	47.5	C5	40	71.5	60	96	70	129

STANDARD SOFT JAW FOR 3R CHUCK

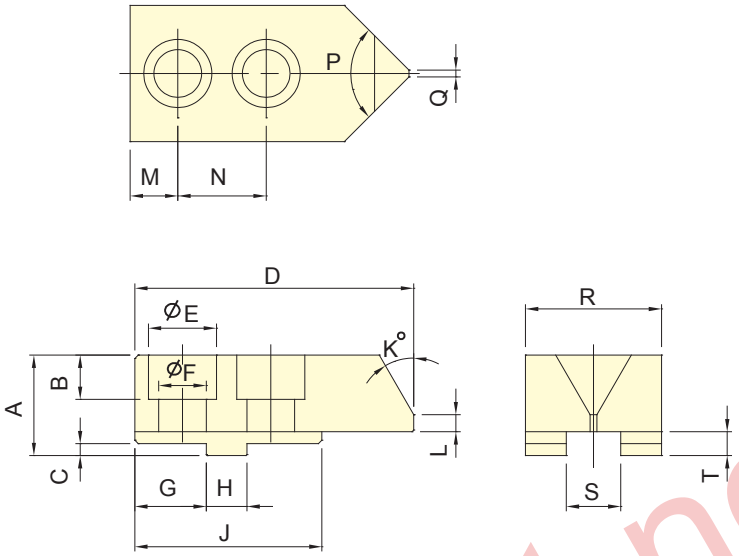

Subject to technical changes

DIMENSIONS

MODEL	A	B	C	D	E	F	G	H	J	K	L	M	N	P	Q	R	S	T
3R-08	29.5	13	3.5	82	20	14	21	12	55	30	5	14	26	90	2	40	16	7
3R-10	30.5	15	3.5	102	23	16	29.5	15	65	30	7	21	32	90	2	40	18	7

STANDARD SOFT JAW FOR 3W CHUCK

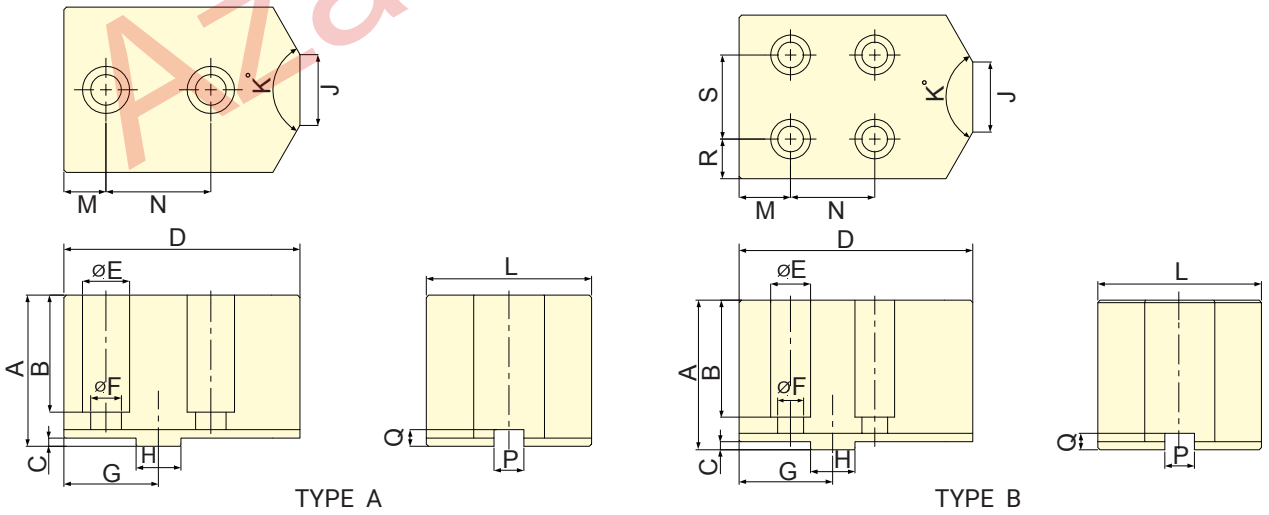

Subject to technical changes

DIMENSIONS

型號 MODEL		A	B	C	D	E	F	G	H	J	K	L	M	N	P	Q	R	S
3W-08	A 型	60	44	3.5	80	20	13	35	12.68	30	120	57	16	38	7.94	7	-	-
	B 型	60	48	3.5	80	17	11	35	12.68	30	120	57	19	32	7.94	7	12.5	32
3W-10	A 型	64	49.5	3.5	100	20	13	40	19.03	30	120	70	17.8	44.4	12.7	7	-	-
	B 型	64	50	3.5	100	17	11	40	19.03	30	120	70	22	36	12.7	7	17	36
3W-12	A 型	64	49.5	3.5	100	20	13	40	19.03	30	120	70	17.8	44.4	12.7	7	-	-
	B 型	64	50	3.5	100	17	11	40	19.03	30	120	70	22	36	12.7	7	17	36

STANDARD SOFT JAW FOR 3MF CHUCK

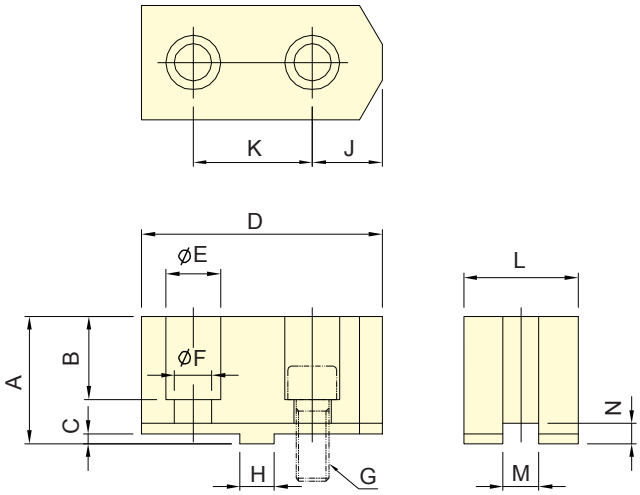

Subject to technical changes

DIMENSIONS

MODEL	A	B	C	D	E	F	G	H	J	K	L	M	N	3 Jaw Weight (kg)
3MF-20	70	48	6	160	25	17	M16	19.03	41.9	76.2	50	12.7	11.5	10.4

STANDARD SOFT JAW FOR AP CHUCK

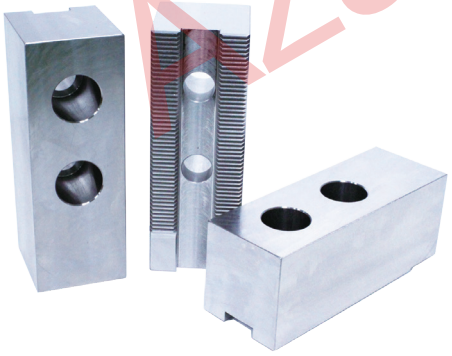

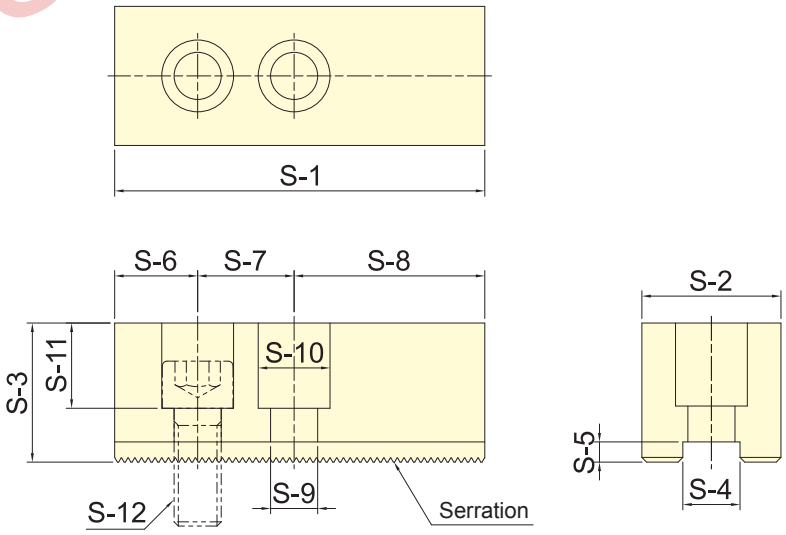

Subject to technical changes

DIMENSIONS

MODEL	S-1	S-2	S-3	S-4	S-5	S-6	S-7	S-8	S-9	S-10	S-11	S-12	Serration Pitch	Matching Chuck	3 Jaw Weight
SJ-145	165	62	62	25.5	9	37	43	85	21	32	38	M20	3.0×60°	AP-145, AP-185	12.2
SJ-185	165	62	62	25.5	9	37	43	85	21	32	38	M20	3.0×60°	AP-145, AP-185	12.2
SJ-230	180	64	70	25.5	9	40	60	80	21	32	45	M20	3.0×60°	AP-230, AP-275	16.1
SJ-275	180	64	70	25.5	9	40	60	80	21	32	45	M20	3.0×60°	AP-230, AP-275	16.1
SJ-320	210	75	80	30	9	40	60	110	26	38	55	M24	3.0×60°	AP-320, AP-375	24.7

STANDARD HARDENED JAW(I)

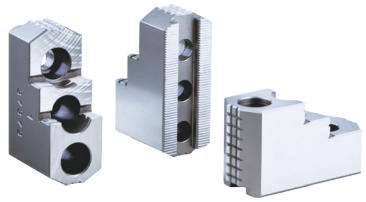

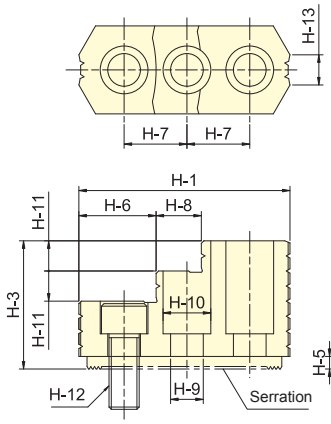

Fig. 1

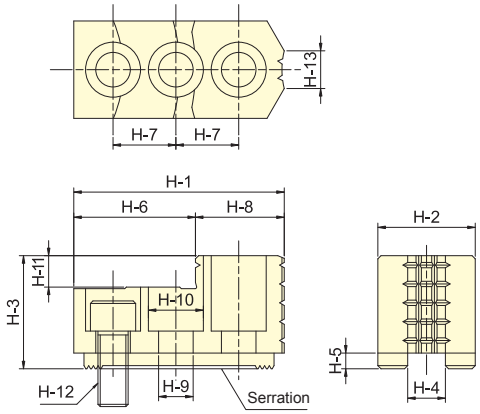

Fig. 2

Subject to technical changes

DIMENSIONS

MODEL	H-1	H-2	H-3	H-4	H-5	H-6	H-7	H-8	H-9	H-10	H-11	H-12	H-13	Serration Pitch	Matching Chuck	3 Jaw Weight kg	Reference Drawing
HJ-05	53	23	28	10	4	30	14	23	8.5	13.5	10	M8	6	1.5×60°	3H-204, 3H-205	1	Fig.2
HJ-06	67	31	36	12	5	38.5	20	28.5	11	17	12	M10	10	1.5×60°	3H-206, 3P-06	1.7	Fig.2
HJ-08	87	35	51	14	5	32	25	18	13	19	12	M12	12	1.5×60°	3H-208, 3P-08	2	Fig.1
HJ-10	102	40	54	16	5	39	30	23	13	19	13	M12	16	1.5×60°	3H-210, 3P-10	3	Fig.1
HJ-12H	103	50	52	21	5	62.5	30	40.5	17	25	17	M16	30	1.5×60°	3H-12, 3H-212, 3L-212, 3V-12, 3P-12, 3M-12	3.5	Fig.2
HJ-12P	103	50	52	18	5	62.5	30	40.5	15	22	17	M14	30	1.5×60°	3H-12, 3H-212, 3L-212, 3V-12, 3P-12, 3M-12	3.6	Fig.2
HJ-15H	149	62	86	22	8	63	43	34	21	32	20	M20	43	1.5×60°	3H-15, 3H-215, 3H-18 , 3L-15 3P-215, 3P-218, 3V-15, 3V-18	9.6	Fig.1
HJ-15P	149	62	86	25.5	6	63	43	34	21	32	20	M20	43	1.5×60°	3H-15, 3H-215, 3H-18, 3L-15 3P-215, 3P-218, 3V-15, 3V-18	9.5	Fig.1
HJ-21	159.5	80	90	25	9	104.5	50	55	21	32	40	M20	55	3.0×60°	3H-221, 3H-224, 3H-232, 3P-221, 3P-224, 3V-21, 3V-24, 3V-32	14.3	Fig.2

STANDARD HARDEN JAW FOR 3MF CHUCK

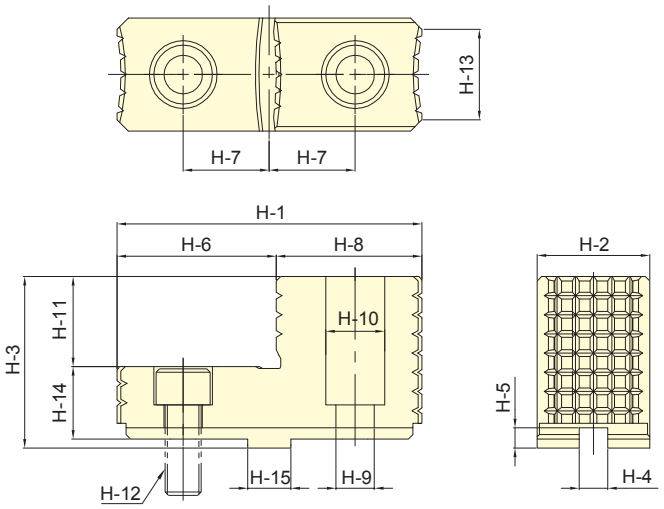

Subject to technical changes

DIMENSIONS

Model	H-1	H-2	H-3	H-4	H-5	H-6	H-7	H-8	H-9	H-10	H-11	H-12	H-13	H-14	H-15	Matching Chuck	3 Jaw Weight (kg)
3MF-20	135	50	76	12.7	9	70	38.1	65	17	26	40	M16	40	32	19.03	3MF-20	6.7

STANDARD HARDEN JAW FOR AP CHUCK

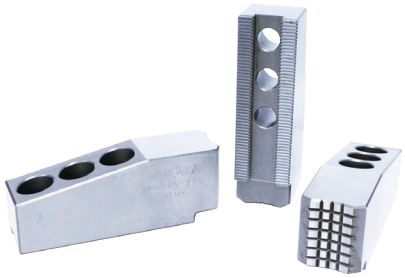

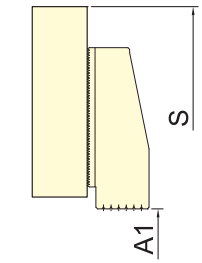

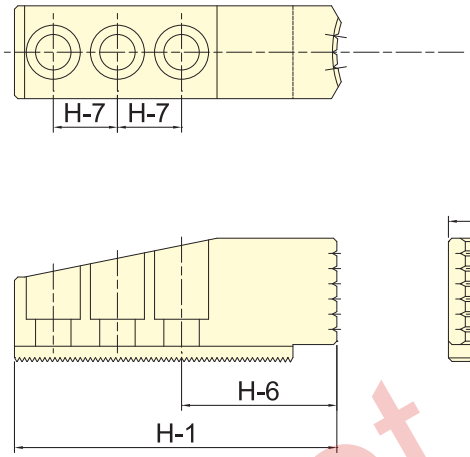

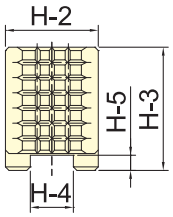

Subject to technical changes

DIMENSIONS

Model	H-1	H-2	H-3	H-4	H-5	H-6	H-7	A1	S	Serration Pitch	Matching Chuck	3 Jaw Weight (kg)
HJ-145	191	55	73	25.5	9	92	38	28-120	420	3.0×60°	AP-145	12.5
HJ-145	191	55	73	25.5	9	92	38	28-155	460	3.0×60°	AP-185	12.5
HJ-145	191	55	73	25.5	9	92	38	60-235	535	3.0×60°	AP-230	12.5
HJ-145	191	55	73	25.5	9	92	38	105-280	580	3.0×60°	AP-275	12.5
HJ-320	243	75	82	30	9	110	50	100-295	658	3.0×60°	AP-320	24.6
HJ-320	243	75	82	30	9	110	50	175-375	738	3.0×60°	AP-375	24.6

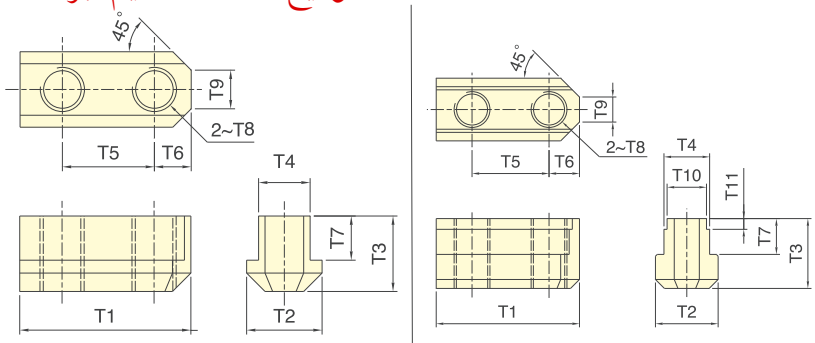

TN1

TN2

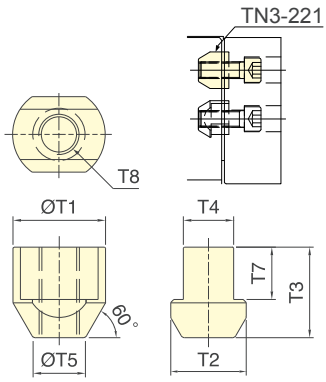

TN3

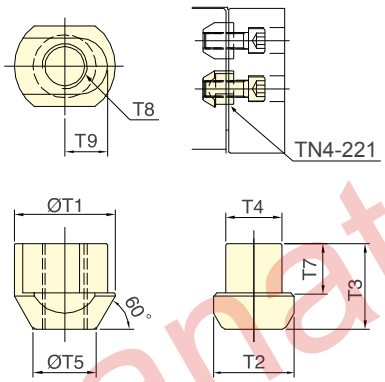

TN4

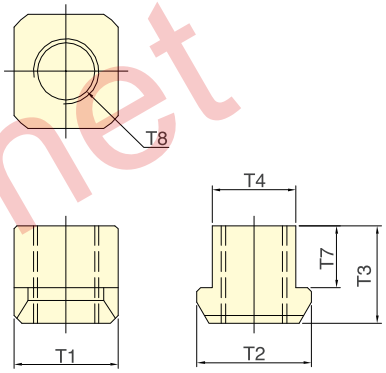

TN5

Subject to technical changes

DIMENSIONS

Model	T1	T2	T3	T4	T5	T6	T7	T8	T9	T10	T11	Matching Chuck	3 Jaw Weight kg
TN1-04	26	14	15	10	14	6	9.5	M8	5	-	-	3H-204, 2H-204, 3P-04, 2P-04, 3H-205, 2H-205, 3P-05, 2P-05, 3L-205,2L-205, 3M-05, 2M-05, SP-304	0.06
TN1-06	36	17	18.5	12	20	8	11	M10	6	-	-	3H-206,2H-206,4H-206,RAP-306, 3P-06,2P-06,3L-206,2L-206,1L-06,3M-06,2M-06, 3N-06,SP-306, AP-52	0.15
TN1-08	46.5	20	20.5	14	25	10.5	12	M12	10	-	-	3H-208,2H-208,4H-208,RAP-308, 3P-08,2P-08,3L-208,2L-208,1L-08,3M-08,2M-08, 3N-08,4T-08,SP-308, AP-66	0.27
TN1-10	51	22	21.5	16	30	11	13	M12	11	-	-	3H-210,2H-10,4H-10,RAP-310, 3P-10, 2P-10, 3L-210, 2L-210, 1L-10, 3M-10, 2M-10, 3N-10, 4T-10, SP-310, AP-86	0.36
TN1-12	55.5	29.5	28	21	30	12	16.7	M16	13	-	-	2H-12,3P-12,2P-12,2L-12,3M-12,2M-12	0.63
TN2-12	55.5	29.5	28	21	30	12	16.7	M14	13	18	4.5	2H-12,3P-12,2P-12,2L-12,3M-12,2M-12	0.63
TN1-15	80	35	39	25.5	43	17	20	M20	14	-	-	3H-18,3H-18B,2H-15,4H-15,4H-18, 3P-215,3P-218,2P-15,3L-15,2L-15,3M-215,3M-218, 3V-15,3V-18	1.53
TN2-15	80	35	39	25.5	43	17	20	M20	14	22	6	3H-18,3H-18B,2H-15,4H-15,4H-18, 3P-215,3P-218,2P-15,3L-15,2L-15,3M-215,3M-218, 3V-15,3V-18	1.5
TN1-212	56	29.5	23.5	21	30	12	12	M16	10	-	-	3H-12,4H-12,3H-212,3L-212,3V-12,4T-15,AP-115	0.63
TN2-212	56	29.5	23.5	21	30	12	12	M14	10	18	4	3H-12,4H-12,3H-212,3L-212,3V-12,4T-15,AP-115	0.63
TN1-215	80	35	34	25.5	43	17	19	M20	14	-	-	3H-15, 3H-215, 3L-215	1.32
TN2-215	80	35	34	25.5	43	17	19	M20	14	22	6	3H-15, 3H-215, 3L-215	1.29
TN3-21	46	37.5	45	25	26	-	26	M20	-	-	-	3P-221, 3P-224,3M-221,3M-224,3V-21,3V-24,3V-32	1.84
TN3-221	45	36	38	25	28	-	22	M20	-	-	-	3H-221, 3H-224, 3H-232	0.69
TN4-221	45	36	38	25	28	-	22	M20	19	-	-	3H-221, 3H-224, 3H-232	0.63
TN5-185	32	35	30	25.5	-	-	19	M20	-	-	-	AP-145, AP-185, AP-230, AP-275	0.15
TN5-320	36	42	39	30	-	-	24	M24	-	-	-	AP-320, AP-375	0.24

CHUCK ADAPTORS

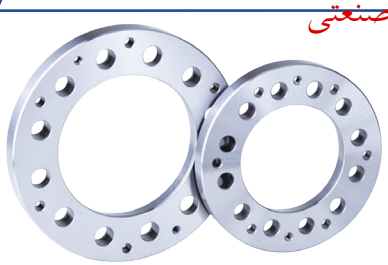

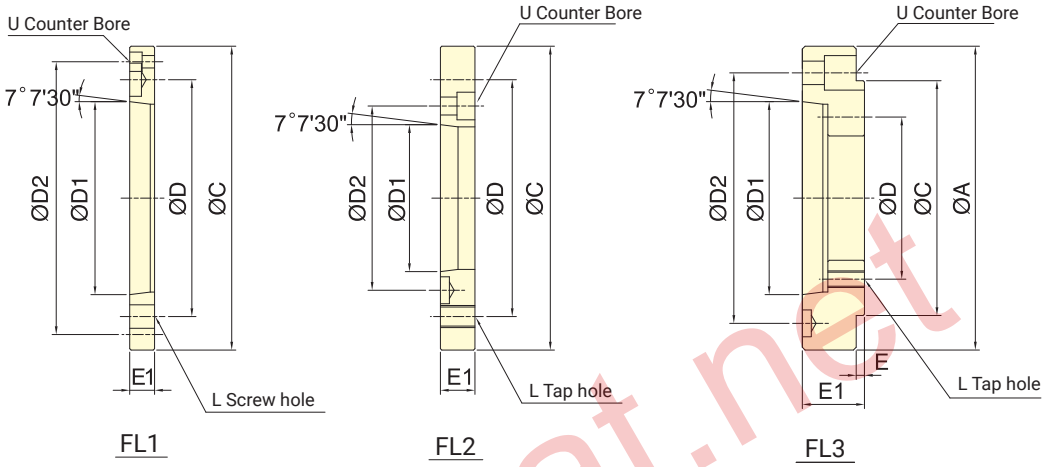

Subject to technical changes

DIMENSIONS

Model	A	C	D	D1	D2	E	E1	L	U	Remark	Weight (kg)
FL3-04A$_2$4	110	85	70.6	63.513	82.6	8	28	M10	M10	3H-204, 2H-204	1.12
FL3-04A$_2$5	140	85	70.6	82.563	104.8	5.5	32	M10	M10	3H-204, 2H-204	2.28
FL1-05A$_2$4	-	110	82.6	63.513	96	-	15	M10	M6	3H-205, 2H-205, 3L-05, 2L-05, 3J-05, 2J-05	0.65
FL3-05A$_2$5	135	110	82.6	82.563	104.8	6	30	M10	M10	3H-205, 2H-205, 3L-05, 2L-05	1.99
FL1-06A$_2$5	-	140	104.8	82.563	116	-	15	M10	M6	2H-206, 4H-206, 3H-206, 3P-06, 2P-06, 3M-06, 2M-06, 3E-06, 3D-06, 2D-06, 3N-06, 3J-06, 2J-06	0.96
							*18			*3L-206, *2L-206	
FL3-06A$_2$6	165	140	104.8	106.375	133.4	6	35	M10	M12	2H-206, 4H-206, 3H-206, 3L-206, 2L-206, 3P-06, 2P-06, 3M-06, 2M-06, 3E-06, 3D-06, 2D-06, 3N-06, 3J-06, 2J-06	3.12
FL2-08A$_2$5	-	170	133.4	82.563	104.8	-	23	M12	M10	3H-208, 2H-208, 4H-208, 3L-208, 2L-208, 3P-08, 2P-08, 3M-08, 2M-08, 4T-08, 3E-08, 3D-08, 2D-08, 3N-08, 3J-08, 2J-08, 3R-08, 3W-08, 3Q-08	2.7
FL1-08A$_2$6	-	170	133.4	106.375	150	-	17	M12	M6	2H-208, 4H-208, 3H-208, 3P-08, 2P-08, 3M-08, 2M-08, 4T-08, 3E-08, 3D-08, 2D-08, 3N-08, 3J-08, 2J-08, 3R-08, 3W-08, 3Q-08	1.55
							*23			*3L-208, *2L-208	
FL2-10A$_2$6	-	220	171.4	106.375	133.4	-	25	M16	M12	2H-10, 4H-10, 3P-10, 2P-10, 3M-10, 2M-10, 3H-12, 2H-12, 4H-12, 3L-212, 2L-12, 3P-12, 2P-12, 3M-12, 2M-12, 4T-10, 4T-12, 3E-10, 3D-10, 2D-10, 3N-10, 3J-10, 2J-10, 3R-10, 3Q-10, 3W-10, 3W-12	5.02
FL1-10A$_2$8	-	220	171.4	139.719	190	-	18	M16	M8	2H-10, 4H-10, 3H-210, 3L-210, 2L-210, 3P-10, 2P-10, 3M-10, 2M-10, 3H-12, 2H-12, 4H-12, 3L-212, 2L-12, 3P-12, 2P-12, 3M-12, 2M-12, 4T-10, 4T-12, 3E-10, 3D-10, 2D-10, 3N-10, 3J-10, 2J-10, 3R-10, 3Q-10, 3Q-12, 3W-10, 3W-12	2.73
FL2-15A$_2$8	-	300	235	139.719	171.4	-	33	M20	M16	3H-15, 3H-212, 2H-15, 4H-15, 3L-15, 2L-15, 3P-215, 2P-15, 3M-15, 2M-15, 4T-15, 3H-18, 4H-18, 3P-218	12.52
FL1-15A$_2$11	-	300	235	196.869	260	-	22	M20	M10	3H-15, 3H-212, 2H-15, 4H-15, 3L-15, 2L-15, 3P-215, 2P-15, 3M-15, 2M-15, 4T-15, 3H-18, 4H-18, 3P-218	6.03
FL2-21A$_2$8	-	380	330.2	139.719	171.4	-	33	M24	M16	3H-215, 3P-221, 3P-224	22.05
FL2-21A$_2$11	-	380	330.2	196.869	235	-	40	M24	M20	3H-215	16.28
							*27			*3P-221, *3P-224	
FL1-21A$_2$15	-	380	330.2	285.775	330.2	-	27	M24	M12	3H-215, 3H-18B, 3H-221, 3P-221, 3P-224	8.6
FL2-40A$_2$15	-	520	463.6	285.775	330.2	-	40	M24	M24	3H-224	43.26
FL1-40A$_2$20	-	520	463.6	412.775	463.6	-	27	M24	M12	3H-224, 3H-232	13.55

1. Models with * mark are producted only by order.

COOLANT COLLECTOR WITH STROKE CONTROL

- The proximity switch is optional.

Model	Power supply	Switching cap.	Output tpye
IFS287 (IFM)	DC 10/30V	100mA	NPN

■ Terminal Connections

Model	+V	OP1	OV
IFS287 (IFM)	BROWN	BLACK	BLUE

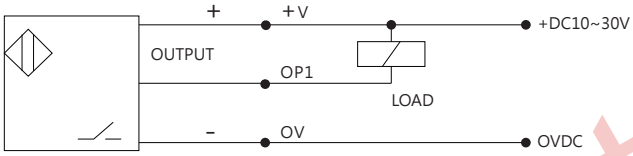

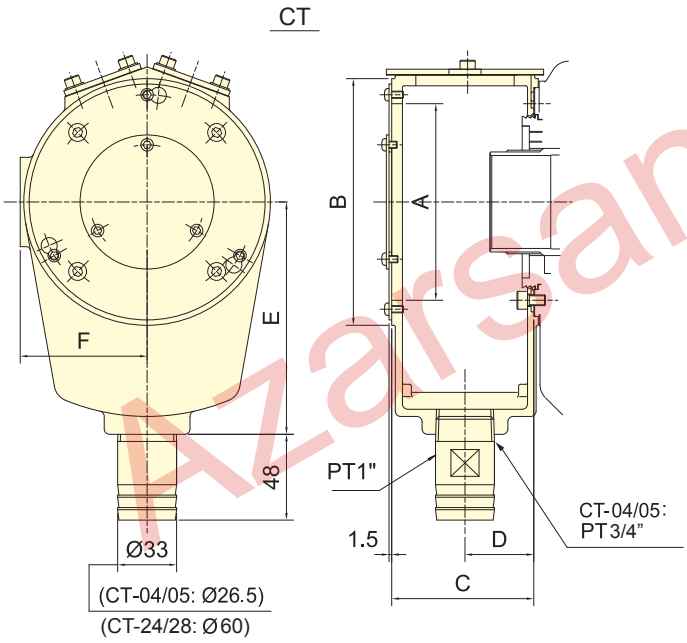

Coolant Collector

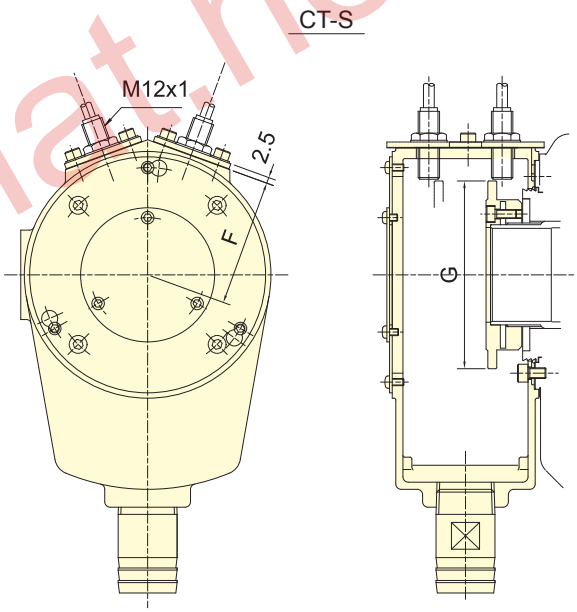

Coolant Collector with Detecting Ring

Subject to technical changes

DIMENSIONS

Model	A	B	C	D	E	F	G	Weight (kg)		Matching cyl.
								CT	CT-S	
CT-04/CT-04S	87	110	60	29	110	57	79	0.9	1.1	TH-428
CT-05/CT-05S(TH)	87	110	60	29	110	57	84	0.9	1.1	TH-A536
CT-05/CT-05S(TK)	87	110	60	29	110	57	84	0.9	1.1	TK-A528, TK-A533
CT-06/CT-06S	100	125	74	36	120	64.5	94	1.2	1.6	TK-C643, TK-A646, TK-B646, TK-C646, TR-646
CT-08/CT-08S	110	138	80	39	130	71	105	1.3	1.8	TK-B846, TK-A853, TK-B853
CT-K10/CT-K10S	158	185	88	43	160	94.5	145	1.9	2.6	TK-1068, TK-A1075, TK-A1078
CT-12/CT-12S	158	185	88	43	160	94.5	145	1.9	2.6	TK-A1287, TK-A1291
CT-15/CT-15S	206	235	100	50	210	121	190	3.1	4.3	TK-A1511, TK-A1512
CT-21/CT-21S	226	255	100	50	210	131	210	3.3	4.6	TK-2114
CT-24/CT-24S	250	270	100	50	230	154	248	3.5	5.5	TK-2416, TK-2416L
CT-28/CT-28S	310	330	100	50	260	181	305	4.3	7.2	TK-2820

CT-SB/CT-SBS COOLANT COLLECTOR WITH STROKE CONTROL

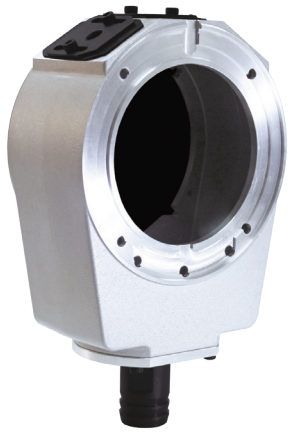

- The proximity switch is optional.
- Drain port Ø40 and Ø60 are optional product.

Model	Power supply	Switching cap.	Output tpye
IFS287 (IFM)	DC 10/30V	100mA	NPN

■ Terminal Connections

Model	+V	OP1	OV
IFS287 (IFM)	BROWN	BLACK	BLUE

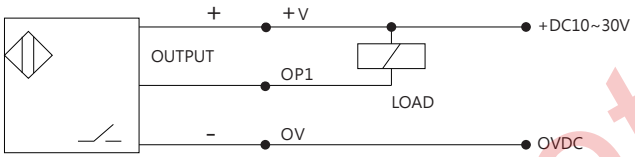

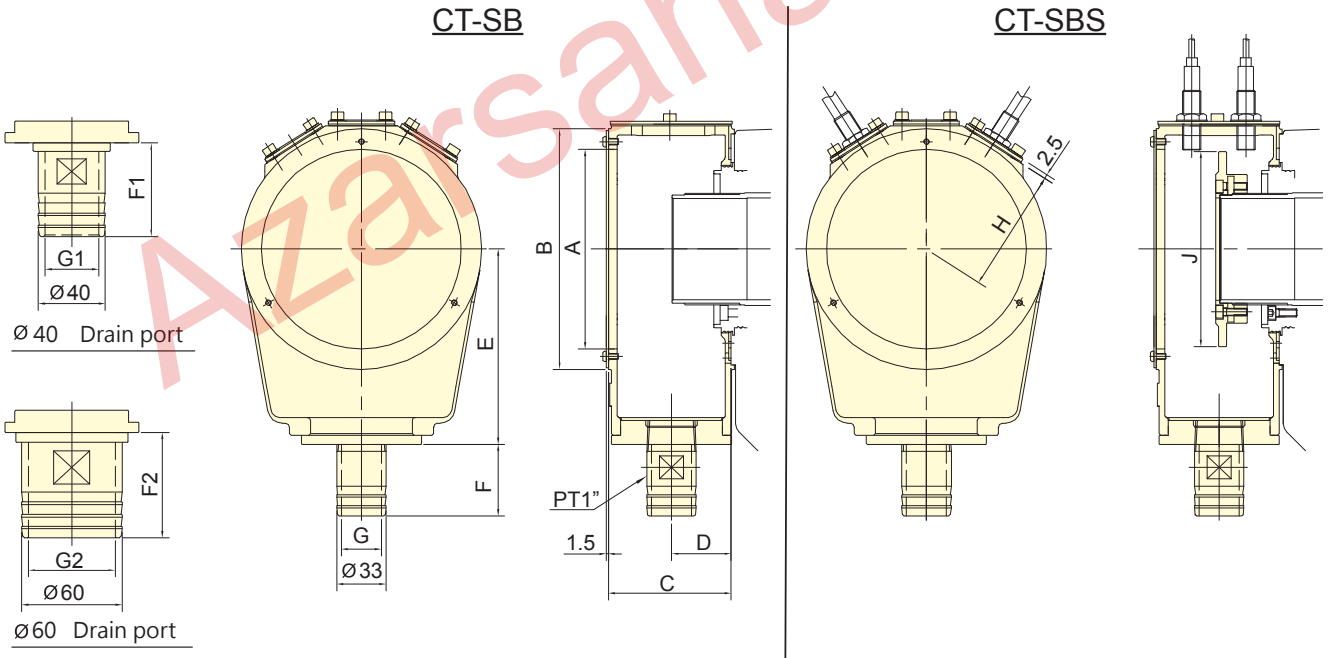

Coolant Collector

Coolant Collector with Detecting Ring

Subject to technical changes

DIMENSIONS

Model	A	B	C	D	E	F	F1	F2	G	G1	G2	H	J	Weight (kg)		Matching cyl.
														CT-SB	CT-SBS	
CT-S05B/CT-S05BS	97	120	68.3	33.3	96	49.6	56	-	25	32	-	62	86	1.1	1.6	TS-539,TR-539
CT-S08B/CT-S08BS	133	160	82	40	130	49.6	56	63	25	32	52	82	130	0.9	1.4	TS-866

FV-01

STATIONARY CYLINDER LOCK VALVE FOR AIR STATIONARY CHUCK

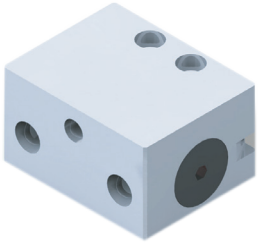

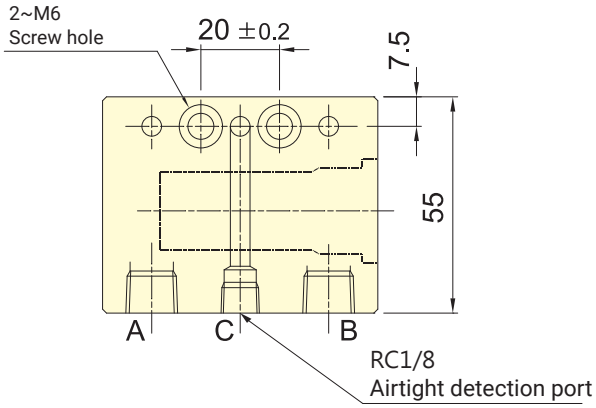

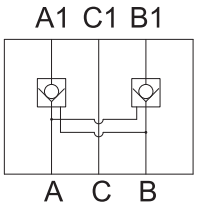

Circuit drawing

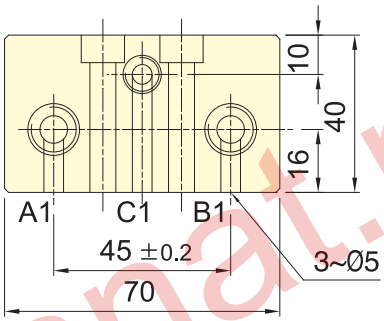

Subject to technical changes

VH-201

HAND OPERATED AIR VALVE

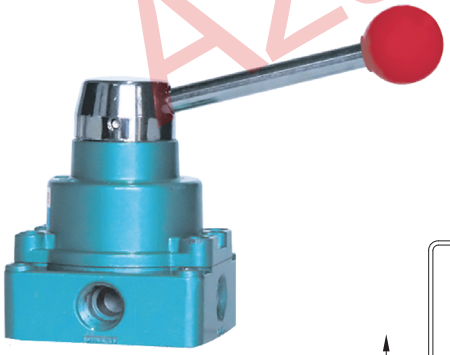

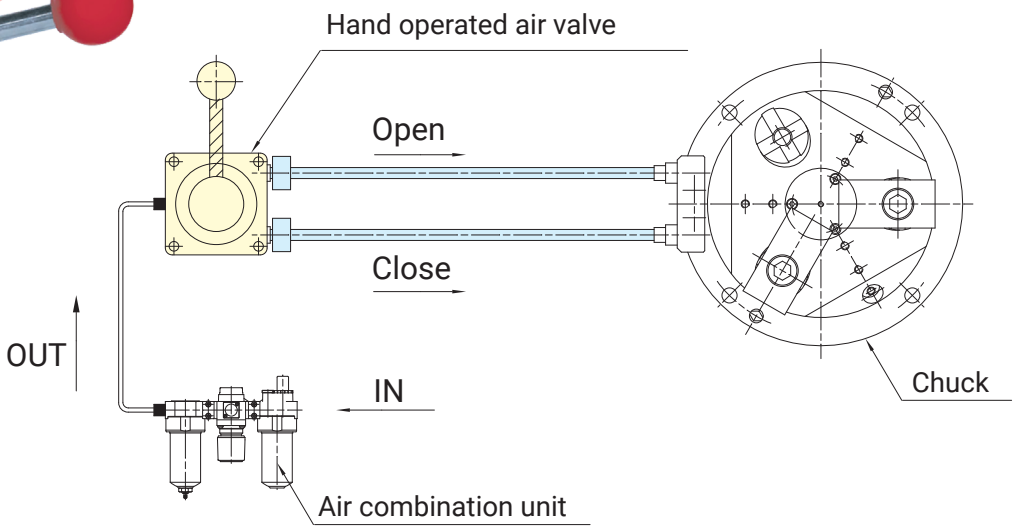

Assembly drawing

Subject to technical changes

Max. pressure MPa(kgf/cm²)	Operating angle	Port size
1.0(10)	90°	Rc1/4

آذرصنعت

THE CALCULATION OF DRAW TUBE LENGTH

وارد کننده و توزیع کننده مستقیم ابزار آلات صنعتی

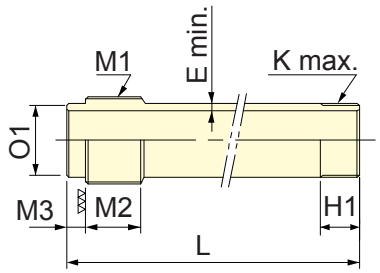

Detail of Draw Tube

L=A+G2max.+H-G1max.+M2+M3

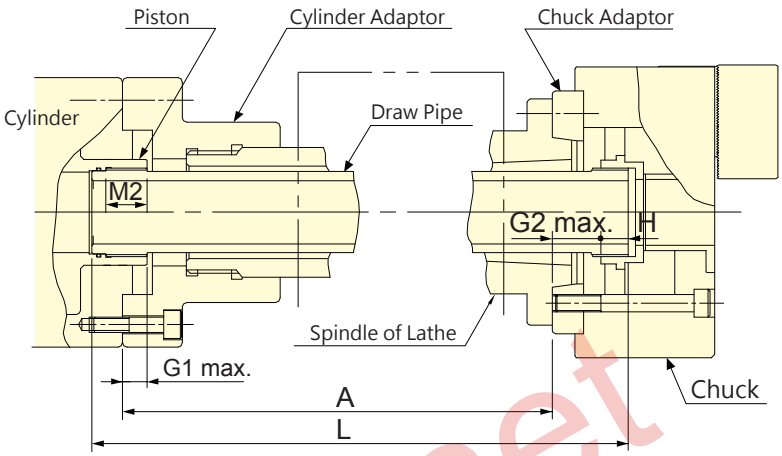

Subject to technical changes

SPECIFICATIONS

Chuck type		Cylinder type	G1 max.	H	M3	M2	G2 max.	M1	H1	O1 (f7)		K max.	E min.	L
3H-12	A8	TK-A1291	30	23	12	35	28	M100x2	35	95	-0.036 -0.071	M100x2	5	A+56+12
3H-15	A11	TK-A1512	30	33	12	45	33	M130x2	45	125	-0.043 -0.083	M130x2	5	A+81+12
3H-18	A11	TK-A1512	30	33	12	45	33	M130x2	45	125	-0.043 -0.083	M130x2	5	A+81+12

Chuck type		Cylinder type	G1 max.	H	M3	M2	G2 max.	M1	H1	O1 (f7)		K max.	E min.	L
3H-204	A4	TK-A528	12	14.5	10	25	31.5	M38x1.5	20	35	-0.025 -0.05	M40x1.5	5	A+59+10
3H-205	A4	TK-A533	12	17	10	25	16	M38x1.5	25	35	-0.025 -0.05	M45x1.5	5	A+46+10
3H-206	A5	TK-A646	15	14	10	25	28	M55x2	20	50	-0.025 -0.05	M60x2	5	A+52+10
3H-208	A6	TK-A853	20	16.5	12	30	33.5	M60x2	20	55	-0.03 -0.06	M75x2	5	A+60+12
3H-210	A8	TK-A1075	25	21	12	35	28.5	M85x2	25	80	-0.03 -0.06	M95x2	5	A+59.5+12
3H-212	A11	TK-A1512	30	23	12	45	32	M130x2	30	125	-0.043 -0.083	M115x2	5	A+70+12
3H-215	A8	TK-2114	35	33	17	45	44	M155x3	40	145	-0.043 -0.083	M115x2	5	A+87+17
3H-215	A11	TK-2114	35	33	17	45	51	M155x3	40	145	-0.043 -0.083	M155x3	5	A+93+17
3H-215	A15	TK-2114	35	33	17	45	38	M155x3	40	145	-0.043 -0.083	M155x3	5	A+81+17
3H-18B	A15	TK-2416	35	35	17	45	45	M180x3	40	170	-0.043 -0.083	M175x3	5	A+90+17
3H-221	A15	TK-2416	35	34	17	45	42	M180x3	40	170	-0.043 -0.083	M190x3	5	A+86+17
3H-224	A20	TK-2820	51	35	17	45	42	M220x3	40	210	-0.050 -0.096	M225x3	5	A+71+17
3H-232	A20	TK-2820	51	37	17	45	51	M220x3	45	230	-0.050 -0.096	M295x3	5	A+82+17

Note:To calculate the draw-tube length of 2H,4H as 3H、3H-2.

THE CALCULATION OF DRAW BAR LENGTH

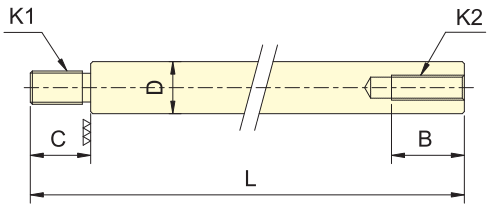

Detail of Draw Bar

L=A-G1max.-G2min.-4+C

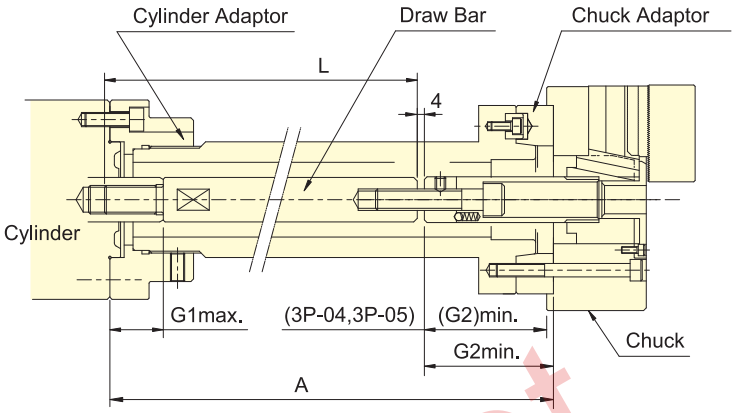

Subject to technical changes

SPECIFICATIONS

Chuck type	Cylinder type	B	C	D	G1 max.	G2 min.	K1	K2	L
3P-04	RK-75(N)/RA-130	30	30/20	30/25	45	3	M20x2.5/M16x2	M10x1.5	A-22/A-32
3P-05	RK-75(N)/RA-130	40	30/20	30/25	45	-6	M20x2.5/M16x2	M12x1.75	A-13/A-23
3P-06	RK-100(N)/RA-170	40	30/25	30/25	45	81.5	M20x2.5/M16x2	M16x2	A-101/A-106
3P-08	RK-125(N)/RA-220	40	40/30	35/30	50	106	M24x3/M20x2.5	M20x2.5	A-120/A-130
3P-10	RK-125(N)/RA-220	40	40/30	35/30	50	133	M24x3/M20x2.5	M20x2.5	A-147/A-157
3P-12	RK-150(N)/RA-270	40	40/35	45/35	55	133	M30x3.5/M24x3	M20x2.5	A-152/A-157
3P-215	RK-200(N)/RH-200	60	55	55	70	69	M36x4	M30x3.5	A-88
3P-218	RK-200(N)/RH-200	60	55	55	70	57	M36x4	M30x3.5	A-76
3P-221	RK-200(N)/RH-200	60	55	55	70	62	M36x4	M30x3.5	A-81
3P-224	RK-200(N)/RH-200	60	55	55	70	62	M36x4	M30x3.5	A-81

Note:To calculate the draw-bar length of 2P as 3P.

Chuck type	Cylinder type	B	C	D	G1 max.	G2 min.	K1	K2	L
3M-05	RK-75(N)	40	30	30	45	-2	M20x2.5	M12x1.75	A-17
3M-06	RK-100(N)	40	30	30	45	81.5	M20x2.5	M16x2	A-101
3M-08	RK-125(N)	40	40	35	50	106	M24x3.0	M20x2.5	A-120
3M-10	RK-150(N)	40	40	35	50	135	M24x3.0	M20x2.5	A-148
3M-12	RK-150(N)	50	40	45	55	40	M30x3.5	M24x3	A-59

Note:To calculate the draw-bar length of 2M as 3M.

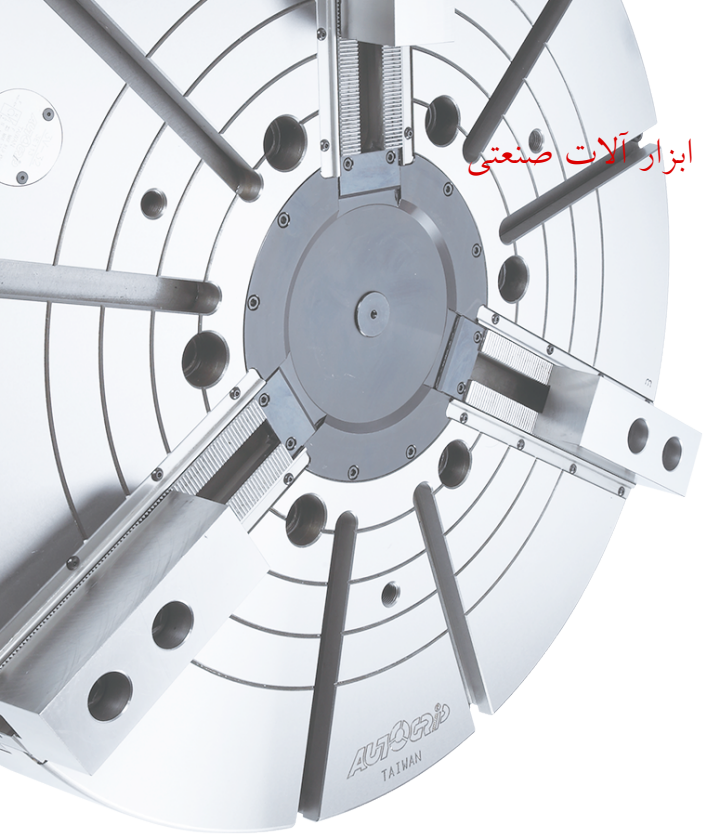

Autogrip Machinery Co., Ltd.
No. 229, Sec. 1, Mingsheng Rd., Puxin Township,
Changhua County 513, Taiwan
Tel:886-4-822-8719 Fax:886-4-823-5719
E-mail:sales@autogrip.com.tw
www.autogrip.com.tw

cat.2020.07E